YAMARIN AURA CABIN

Owner's Manual



Table of Contents

1 Introduction....6
1.1 About this manual....6
1.2 Copyright and disclaimer....7
1.3 Warranty....8
1.4 Contact information....8
2 Safety....9
2.1 Owner's responsibilities....9
2.1.1 Registration and insurance....9
2.1.2 Training and experience....9
2.1.3 Maintenance and care....10
2.1.4 Before setting off....10
2.2 Warning symbols....11
2.3 Safety labels....12
2.3.1 Safety label descriptions and locations....12
2.4 Fire-fighting and fire protection....14
2.4.1 Fire extinguisher....15
2.4.2 Location of fire extinguisher....16
2.5 Person overboard prevention and recovery....16
3 Basic information....17
3.1 Builder's plate....17
3.2 Design categories....17
3.3 Technical specifications....18
3.3.1 Specification details....18
3.3.2 Measurements for antifouling paint area....19
4 Structural characteristics....21
4.1 Stability and buoyancy....21
4.2 Openings in the hull and deck....21
4.3 Seating areas....21
4.3.1 Designated seats....22
4.4 Doors, gates and hatches....22
4.4.1 Pilot house doors....22
4.4.1.1 Pilot house side doors....24
4.4.1.2 Pilot house aft door....25
4.4.2 Bow cabin door and stairs....25
4.4.2.1 Bow cabin door....26

© 2026 Inha Works

4.4.3 Bow hatch....26
4.4.3.1 Bow cabin hatch....27
4.4.4 Sunroof....27
4.4.4.1 Pilot house sunroof....28
4.4.5 Boarding gate....28
4.4.5.1 Aft boarding gates....29
4.4.5.2 Side boarding gate....30

5 Operation....31

5.1 Helm station controls....31
5.1.1 Control device locations....32
5.1.2 User instructions for controls....32
5.2 Driving....33
5.2.1 Emergency cut-off switch....33
5.2.2 Approaching and leaving the dock....34
5.2.3 Visibility from the steering position....35
5.2.4 Driving at high speed....35
5.2.5 Operating the joystick....36
5.2.5.1 Integrated bow thruster controller....38
5.2.6 Operating the wireless control station....38
5.2.6.1 Man Overboard tags....40
5.2.7 Automatic trim system....42
5.2.7.1 Automatic trim system components....43
5.2.8 Adjusting the trim tabs....43
5.2.9 Using windshield wiper and washer....43
5.3 Mooring, anchoring and towing....44
5.3.1 Attachment points....46

6 Fuel system....47

6.1 Fuel system components....47
6.2 Refueling and maintenance....48
6.3 Fuel-operated equipment....48
6.3.1 Fuel-operated equipment components....49
6.3.2 Heater....49
6.3.3 Water heater....49

7 Engine....50

7.1 Starting engines....50
7.2 Using gearshift and throttle....50

8 Electrical system....52

8.1 System description....52

© 2026 Inha Works

8.2 Main switch and fuse panel....52
8.2.1 Switch and fuse descriptions....53
8.2.2 Fuse panel locations....57
8.3 Battery system....57
8.3.1 Battery compartment locations....58
8.4 Maintaining batteries....58
8.5 Electrical equipment....59
8.5.1 Locations of electrical equipment....60
8.5.2 Shore power....65
8.5.2.1 Locations of shore power equipment....66
8.5.2.2 Connecting shore power....66
8.5.3 Inverter....67
8.5.4 Solar panels....67
8.5.5 Electrically operated seat....68
8.5.6 Cabin, pilot house and deck lights....68
8.5.6.1 Manual switches for digital switch....69
8.5.6.2 Toilet light switches....70
8.5.7 Navigation lights....70

9 Bilge pumps and draining....71

9.1 Electric pump....71
9.2 Locations of draining equipment....72

10 Freshwater system....73

10.1 Freshwater system components....74

11 Toilet and septic tanks....75

11.1 Blackwater system....75
11.2 Greywater system....76

12 Accessories....78

12.1 Anchor winch....78
12.1.1 Anchor winch system components....78
12.1.2 Using the anchor winch....78
12.1.3 Bow anchor winch....79
12.2 Air conditioning....80
12.2.1 Air conditioning system components....81
12.3 Bow thruster....81
12.4 Aft enclosure....81
12.4.1 Raised aft enclosure....82
12.5 Aft awning....82
12.5.1 Raised aft awning....83
12.6 Sunshade....83
12.6.1 Raised sunshade....84

© 2026 Inha Works

13 Environmental considerations....85

14 Maintenance, repairs and docking....86

14.1 Maintenance tasks....86
14.1.1 Before winter lay-up....86
14.1.2 Before launching....86
14.2 Care instructions....87
14.2.1 Washing and waxing the boat....87
14.2.1.1 Fiberglass surfaces....87
14.2.1.2 Aluminium surfaces....88
14.2.1.3 Stainless steel surfaces....88
14.2.1.4 Plastic surfaces....88
14.2.1.5 Windshield....88
14.2.2 Marine upholstery....89
14.2.3 Adjustable seats....89
14.2.4 Electronic remote control device....90
14.2.5 Steering system....90
14.2.6 Electrical components....90
14.3 Trailer transportation and lifting....91
14.3.1 Placement of the lifting straps....92

15 Related documents....93

© 2026 Inha Works

1 Introduction

1.1 About this manual

The purpose of this owner's manual is to help you use your boat in a safe and enjoyable way. The manual includes detailed information about the boat and its equipment and accessories, as well as instructions for use and correct maintenance of the boat. Read the manual carefully and familiarize yourself with your boat before using it.

This owner's manual alone is not a sufficient source of information on seamanship and boating safety, nor is this manual a detailed service and troubleshooting guide.

It is your responsibility to ensure that you have the basic boating skills and that the boat is used safely and maintained properly.

For more details about the owner's responsibilities, see *2 Safety on page 9*.

Conventions used in this manual:

- The units of measurement refer to the International System of Units (SI).
- In some cases, other units may have been added in brackets. If other units of measurement are used, they are always calculated from the original SI unit value.
- Wind speed is an exception to this rule: the Recreational Craft Directive uses the Beaufort scale to indicate wind speed. For consistency, this manual uses the same scale.

Boat orientation used in this manual:

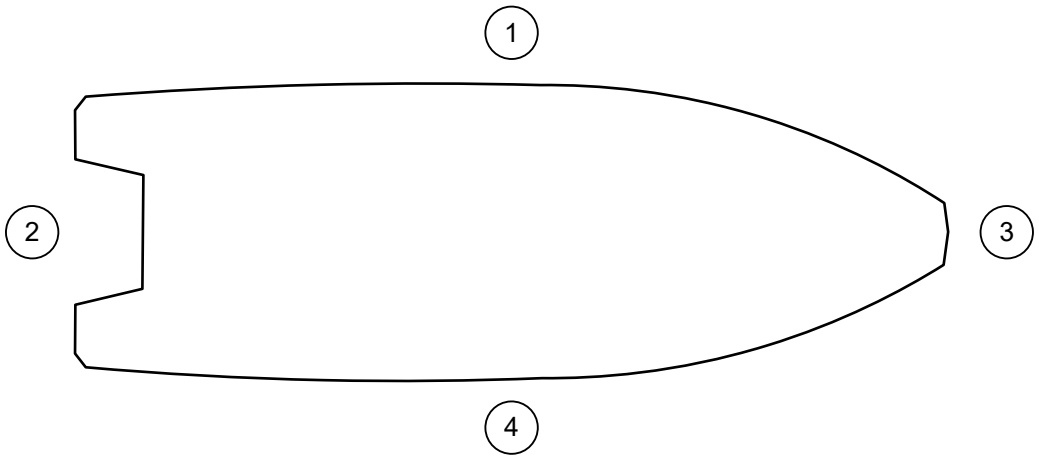

Figure 1.1 Boat orientation

1	Left side / Port side	3	Bow / Forward
2	Aft / Stern	4	Right side / Starboard side

Retain this manual and provide it to the next owner in case you sell your boat.

© 2026 Inha Works

Your authorized dealer:

Table 1.1 Record of ownership

1st owner	Year of purchase:	Domicile:
First and last name:		
2nd owner	Year of purchase:	Domicile:
First and last name:		
3rd owner	Year of purchase:	Domicile:
First and last name:		
4th owner	Year of purchase:	Domicile:
First and last name:		
5th owner	Year of purchase:	Domicile:
First and last name:		

1.2 Copyright and disclaimer

Copyright Inha Works Ltd. All rights reserved.

This owner's manual is protected by copyright controlled by Inha Works Ltd. This manual may not be reproduced wholly or in part without prior written authorization by Inha Works Ltd. Handing this material over to third parties without the prior written consent of Inha Works Ltd. is not allowed.

The material in this manual is for information purposes only.

The material in this manual has been translated from the original language.

Inha Works Ltd. reserves the right to make changes to its product range and to the models, colours, equipment, and technical solutions of its boats without prior notification. The boat's dimensions, weights, performance, and volumes may differ slightly for production-related technical reasons.

Standard equipment may vary by market. Make sure that the boat and the boat's equipment correspond to your order before accepting the delivery.

1.3 Warranty

A warranty is granted for the boat and the factory-installed equipment under the terms and conditions. Warranty documents are delivered with your boat. It is important that you read the warranty document and this manual before you use your boat the first time.

For optional equipment, the manufacturer of the equipment is directly responsible for the warranty. The boat is supplied with separate warranty documents for this equipment.

For all other warranty issues, contact your dealer.

1.4 Contact information

Manufacturer:

Inha Works Ltd.

Hahdenniementie 2

FI-21120 Raisio

Finland

For any enquiries, contact your local dealer.

© 2026 Inha Works

2 Safety

2.1 Owner's responsibilities

As the owner of the boat, you are responsible for safety at all times.

In order to guarantee a pleasant and safe boating experience with your new boat, make sure that you have the necessary training and experience and keep your boat in good condition.

Make sure your boat is equipped with all appropriate safety equipment in accordance with the boat type and weather conditions. In some countries, equipment such as life vests, paddle, ropes, anchor, fire extinguishers and safety harnesses may be compulsory. If your boat is equipped with a life raft, study the instructions carefully.



You are also responsible for the safety of your crew. Make sure that:

- The crew is familiar with the correct use and operation of all safety equipment in the event of an emergency, including rescuing a person who has fallen overboard.
- Everybody wears a buoyancy aid, life jacket, or a boating vest on the deck. In some countries national boating regulations require that everyone aboard wears a personal floatation device whenever on board.

Study carefully and internalize the details in this *Safety* section of the manual.

2.1.1 Registration and insurance

In some countries it is mandatory to register boats of your boat type. Furthermore, operating the boat may be subject to qualification and/or minimum age requirements. Before you begin using the boat, find out whether it needs to be registered or if it is subject to any other official requirements.

Depending on the policy, a boat insurance may cover damage that occurs during the use of the boat, in transportation or during dry-docking. If you intend to lift the boat, check that your insurance also covers this.

Insurance can increase safety by giving you a peace of mind: in the event of an accident, you can concentrate on saving lives rather than property. Detailed information on insurance policies is available from insurance providers.

2.1.2 Training and experience

Safe operation of a boat requires prior training and practice. If this is your first boat or if the boat type is not familiar to you, it is particulary important that you obtain sufficient experience in handling and using the boat before you assume the responsibility of a boat master:

- Always remember to adjust the speed and direction of the boat to correspond to the wind and sea conditions.
- Check that the expected wind and sea conditions match the design category of your boat.
- Ensure that you and your crew are able to navigate the boat in the conditions that may arise.

© 2026 Inha Works

Your boat dealer, local boating clubs and national motor boat and sailing associations can provide you with more information about local training in boating and recommend qualified instructors.

Books and courses provide good preliminary skills, but mastery of boat handling, navigation, mooring and anchoring requires many years of practice.

In some countries, a permit or authorisation may be required to operate the craft and special regulations concerning boats or boating may apply.

2.1.3 Maintenance and care

Always keep your boat in a good condition. A careful use of the boat is part of responsible seamanship.

Be careful to observe any signs of wear caused by age or due to heavy use or abuse. Any boat, no matter how strong it is, may sustain severe damage if used inappropriately.

If you have any questions related to the maintenance of your boat, contact your local dealer. Only use the services of repair companies recommended by your local dealer.

Modifications that affect the safety features of the boat may only be performed with the builder's written authorisation. The builder assumes no responsibility for unauthorised modifications.

2.1.4 Before setting off

Familiarize yourself with this owner's manual and always check at least the following items before leaving.

Weather conditions and forecast

- Take the wind, waves, and visibility into account. Close all the hull windows and hatches during use to prevent water incursion.
- Make sure that the design category, size and equipment of your boat, as well as the skills of the driver and crew are adequate for the area and expected weather conditions.

Loading and stability

- Do not overload the boat.
- Distribute loads appropriately. Do not place heavy items high up.
- Check that there is no water in the bilge.
- Consider that the stability of the boat is reduced if people stand up when on board.
- Check that all the drain holes are open.

Passengers

- Ensure that there is a personal floatation device or life jacket for all people on board.
- Agree crew tasks before setting off.

© 2026 Inha Works

Fuel and fuel system

- Make sure that the boat has enough fuel. Keep in mind that rough conditions at sea have an impact on fuel consumption, and that it can increase by more than 30% when compared to calm conditions.
- As a rule of thumb, aim for there being at least 20% left in the tank when arriving at your destination.
- Check that there are no fuel leaks.

Engine and manoeuvering equipment

- Check the functioning and condition of steering, batteries and remote control.
- Carry out routine checks according to the engine manual.
- For additional instructions concerning the engine, see the engine manual.

Loose equipment

- Check that all equipment and heavy items are positioned so that they stay in place during travel at sea and high winds.
- Note that the seat cushions may fly overboard if they are not fixed properly with press studs.

Nautical charts

- If you are not navigating in familiar waters, ensure you have nautical charts that cover a large enough area.
- If your boat is equipped with a chartplotter, familiarize yourself with it before setting off. Ensure that the charts are of the latest edition.
- Always keep a paper chart on board, even if you have a chartplotter.

Leaving the berth

- Agree with the crew about responsibilities for tasks, for example, who will release each mooring line.
- Be careful not to let mooring lines or the anchoring line tangle in the propeller during manoeuvering.

Mandatory equipment

- Check that all safety equipment is on board and up to date.
- What is considered mandatory varies from country to country. Find out what is required for your boat.

2.2 Warning symbols

This manual includes symbols highlighting important information. Heed the warnings and cautions according to the following severity:

⚠ DANGER Imminent hazard which **will lead to death or serious injury** if not avoided.

© 2026 Inha Works

⚠ WARNING Risk of hazard which **could lead to death or serious injury** if not avoided.

NOTICE Situation which **might lead to property damage or in an unwanted result** if not avoided.



Call for attention.

2.3 Safety labels

The boat has safety labels in dedicated places. Make sure that you familiarize yourself with these labels and their meaning.

To replace a broken safety label, contact your local boat dealer and refer to this manual.

2.3.1 Safety label descriptions and locations

© 2026 Inha Works

Location	Safety label	Description
1		Non-potable water warning.
2		Location of fire extinguisher.
3		Always attach the emergency cut-off cord when driving the boat.

© 2026 Inha Works

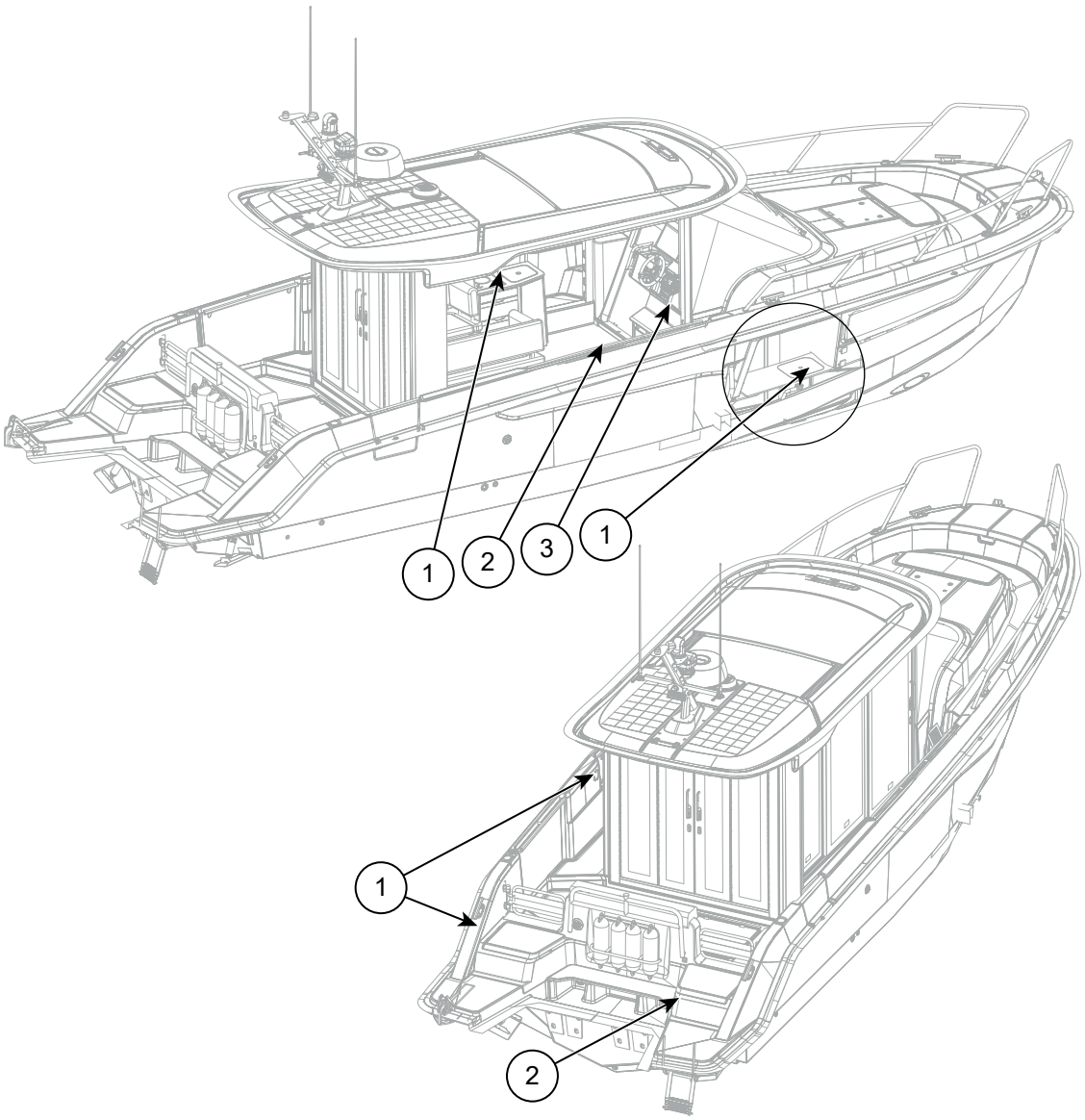

Figure 2.1 Safety labels

2.4 Fire-fighting and fire protection

You are responsible for fire protection for the boat. Ensure that the following items are in order at all times when using the boat.

- All fire-fighting equipment is always easily accessible, whether the boat is empty or loaded.
- All crew members know the location and correct operation of the fire-fighting equipment.
- Make sure that no fuel spills into the bilge.
- Check the boat for fuel leaks at regular intervals. The smell of petrol is a clear sign of a fuel leak.

© 2026 Inha Works

⚠ WARNING Fire hazard systems

Improper use of the fuel or electrical systems may cause fire or explosion and lead to death or serious injury .

Never block access to safety equipment such as the fire extinguisher or the main switch for the electrical system. Ensure that the storage space for the fire extinguisher is unlocked when you use the boat.

Never cover the ventilation openings of the boat designed for the ventilation of fuel fumes.

Never alter the boat's electrical or fuel systems or allow an unqualified person to modify any of the boat's systems.

Never fill the fuel tank or handle fuel when the engine is running.

Never smoke or use a naked flame when handling fuel.

2.4.1 Fire extinguisher

The boat is equipped with two 2 kg category 13A70B C powder fire extinguishers.

The locations of the extinguishers are indicated by a symbol that is visible on the boat. See section *2.3 Safety labels on page 12*.

Ensure that each fire extinguisher is up to date.

- All fire extinguishers are subject to annual inspection.
- Fire extinguishers older than 10 years must also pass a pressure test.
- If the original fire extinguisher is replaced, the minimum extinguishing capacity of the new extinguisher must be of type 8A 68B.

© 2026 Inha Works

2.4.2 Location of fire extinguisher

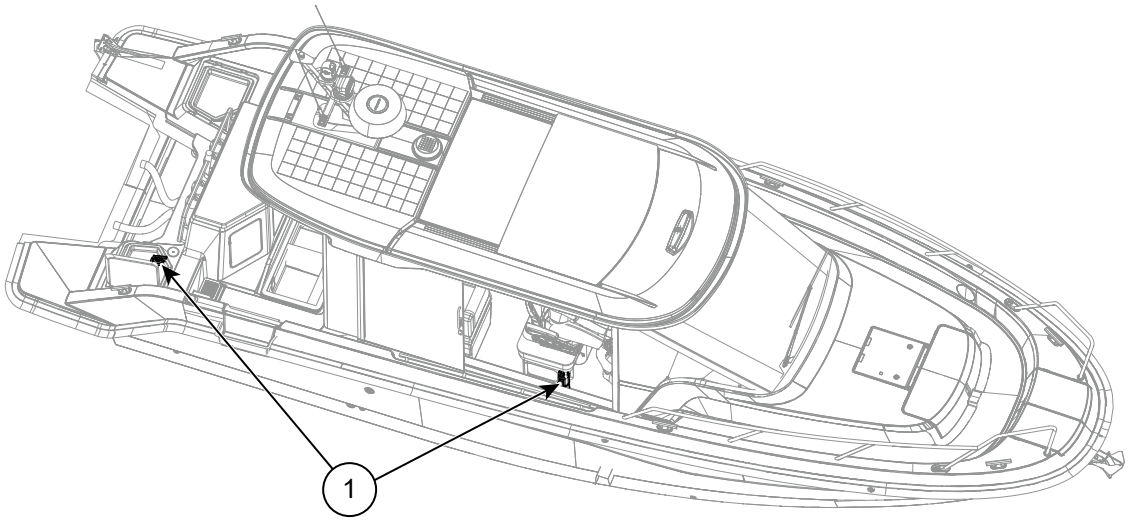

Figure 2.2 Location of fire extinguishers

1 Fire extinguisher

2.5 Person overboard prevention and recovery

To prevent falling overboard, do not stand or occupy any other area than the seats, when the boat is in motion. See *4.3 Seating areas on page 21* for the seats designated for passengers.

In the event of falling overboard, use the swim ladder located on the transom to reboard the boat safely. You can angle down the ladder from within the water.

© 2026 Inha Works

3 Basic information

3.1 Builder's plate

The builder's plate is mounted near the steering console.

Some of the information on the builder's plate is found in the *3.3 Technical specifications on page 18*. Detailed information that supplements the information provided on the plate is given in the relevant sections of this manual.

In addition to the boat model, the builder's plate contains important information about:

- Design category defining the limitations of use.
- Maximum load and number of persons allowed on board.

3.2 Design categories

Design categories define the most severe weather conditions in which the boat has been designed to be operated.



Design category is an important safety classification that must be respected. Always ensure that:

- The expected wind and sea conditions match the design category of your boat.
- You and your crew are able to navigate the boat in the conditions that may arise
- The boat is well maintained.

For each category, the conditions are given in the form of maximum wind force and significant wave height.

"Significant wave height" refers to an average height based on the highest one-third of the wave profile, corresponding roughly to the wave height observed by an experienced mariner. Individual waves may be twice as high.

All Yamarin boats belong to design category B, C or D.

Your boat's design category is given in *3.3 Technical specifications on page 18* in this manual, and on the Builder's plate on the boat.

Design category B

The boat has been designed for voyages where the following conditions may be experienced:

- Wind force of up to and including 8 on the Beaufort scale (approximately 21 m/s).
- Significant wave height of no more than 4 m.

These conditions may be encountered on offshore voyages or in coastal waters when unsheltered from the wind and waves. These conditions may also occur in inland seas of sufficient size for the wave height to be generated.

© 2026 Inha Works

Design category C

The boat has been designed for voyages where the following conditions may be experienced:

- Wind force of up to and including 6 on the Beaufort scale (approximately 14 m/s).
- Significant wave height of no more than 2 m, with a temporary peak wave height of 4 m.

These refer to a range from storms to strong winds, with a risk of unexpected waves and gusts. These conditions may be experienced during voyages on large lakes, estuaries, and, in moderate weather conditions, on coastal waters.

Design category D

The boat has been designed for voyages where the following conditions may be experienced:

- Wind force of up to and including 4 on the Beaufort scale (approximately 8 m/s).
- Significant wave height of no more than 0.3 m, with a temporary peak wave height of 0.5 m.

These conditions may be experienced during voyages on sheltered lakes, rivers, and, in good weather, on coastal waters.

3.3 Technical specifications

Technical specifications are for reference only. Always refer to the Declaration of Conformity and your boat's builder's plate for accurate information.

3.3.1 Specification details

Table 3.1 Yamarin Aura Cabin technical specifications for design categories B and C

Description	Category B	Category C	Unit
Number of persons	8	12	persons
Max load on builder's plate (persons + basic equipment + life raft + stores and cargo)	1594 (3514)	1974 (4352)	kg (lb)
Weight without engine(s)	5847 (12890)	5847 (12890)	kg (lb)
Total weight of fuel and other liquids in fixed tanks	785 (1731)	785 (1731)	kg (lb)
Length overall	10.4 (34' 2")	10.4 (34' 2")	m (ft, in)
Beam	3.36 (11')	3.36 (11')	m (ft, in)
Estimated height, from waterline, light load	3.4 (11' 2")	3.4 (11' 2")	m (ft, in)
Estimated draught, loaded	0.68 (2' 3")	0.68 (2' 3")	m (ft, in)
Max engine power	2* 257.4 (2* 350)	2* 257.4 (2* 350)	kW (hp)
Max engine weight	624.9 (1375.7)	624.9 (1375.7)	kg (lb)
Fuel tank, volume	700 (185)	700 (185)	l (gal)

© 2026 Inha Works

Description	Category B	Category C	Unit
Diesel tank, volume	33 (8.7)	33 (8.7)	l (gal)
Max speed reached in seaworthiness tests	48 (55.2)	48 (55.2)	knots (mph)
Rated force of mooring points	36	36	kN
Pumping capacity of automatic bilge pump	31.5 (8.3)	31.5 (8.3)	l/min (gal/min)
Freshwater tank, volume	100 (26.4) / 200 (52.8)[1)]	100 (26.4) / 200 (52.8)[1)]	l (gal)
Greywater tank volume	100 (26.4)	100 (26.4)	l (gal)
Blackwater tank, volume	60 (15.9)	60 (15.9)	l (gal)
Solar panel, rated power	300	300	W
Windshield washer fluid reservoir, volume	5 (1.3)	5 (1.3)	l (gal)
Max calculated trailer transportation weight	1360	<add>	kg (lb)

1) The optional 200 l freshwater tank excludes the greywater tank from the possible features for the boat.

Table 3.2 Constants used in weight calculations

Description	Value	Unit
Weight of passengers adult/child	75/37.5 (165/83)	kg (lb)
Basic equipment	20 (44)	kg (lb)
Life raft	56 (123.5)	kg (lb)

3.3.2 Measurements for antifouling paint area

The measurements indicate the upper limit of the antifouling paint, not the true waterline of the boat.

© 2026 Inha Works

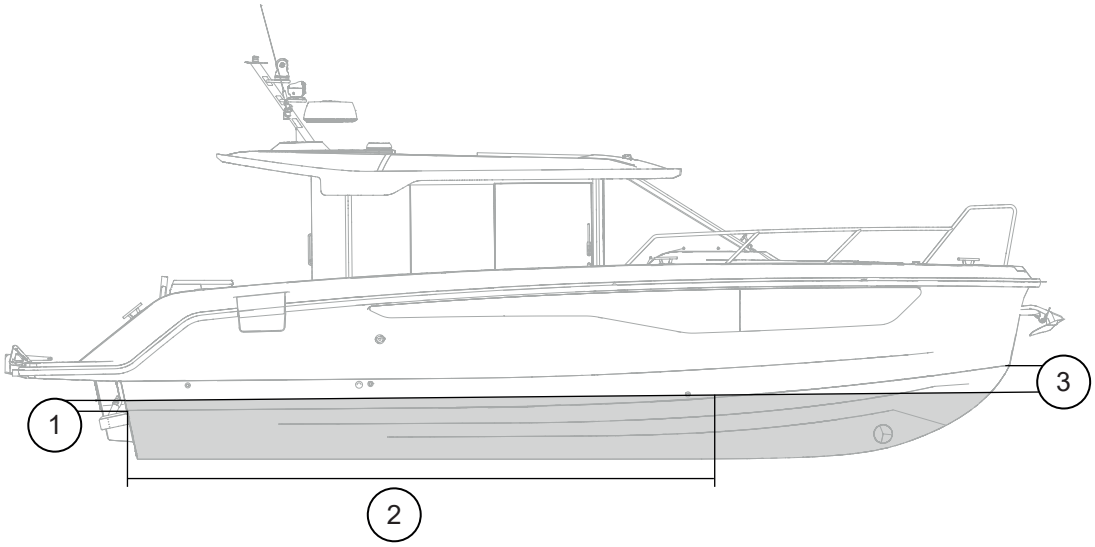

Figure 3.1 Antifouling paint area

Position	Description	mm (in)
1	At stern: directly up from chine	130 mm (5.1")
2	In chine line: from stern	5640 mm (222")
3	At bow: down from chine along the bow	428 mm (16.9")

© 2026 Inha Works

4 Structural characteristics

4.1 Stability and buoyancy

The stability of your boat is excellent due to the hull shape and balanced distribution of weight.

However, keep in mind that the stability of the boat can be reduced by the following:

- Large breaking waves.
- Towing or being towed.
- Any load placed above the floor level.
- Freely moving water in the bilge. Make sure the amount of water in the bilge is minimized. See *9 Bilge pumps and draining on page 71*.

⚠ WARNING When loading the boat, never exceed the maximum permitted load stated on the builder's plate.

- Always load the boat carefully and distribute the load so that the boat's design trim angle is not compromised (even keel).
- Avoid placing heavy objects high up, for instance on the cabin roof.

⚠ WARNING Any change in the distribution of weight could significantly affect the boat's stability, design trim and performance.

Contact your boat dealer if you are planning such a change.

4.2 Openings in the hull and deck

There are drain holes for the rain water on the boat. Make sure that you:

- Close the drain holes if the boat begins to take on water during loading.
- Keep them open in all other circumstances.
- Check and clean the drain holes regularly to prevent blockage.
- Unscrew the rear plug when the boat is docked or on a trailer. Remember to reattach the rear plug before launching the boat.
- For more information about drainage equipment see *9 Bilge pumps and draining on page 71*.

4.3 Seating areas

Your boat has dedicated seats for each passenger. Always use the seats on the boat as shown in the picture.

© 2026 Inha Works

⚠ WARNING Risk of capsizing and sinking.

Do not exceed the maximum permitted number of people.

Make sure the total weight of the people and equipment never exceeds the maximum permitted load, regardless of the number of people on the boat.

For details about the limits, see *3.3 Technical specifications on page 18* or the builder's plate on the boat.

4.3.1 Designated seats

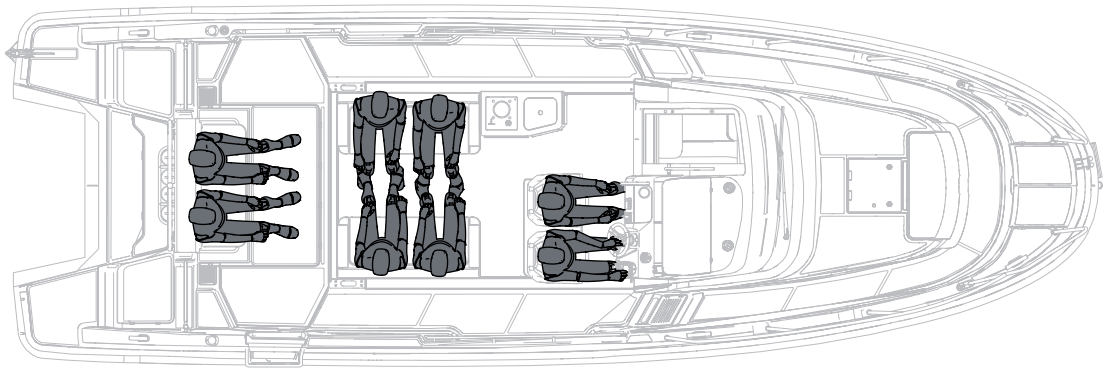

Figure 4.1 Category B seats for a maximum of eight (8) passengers

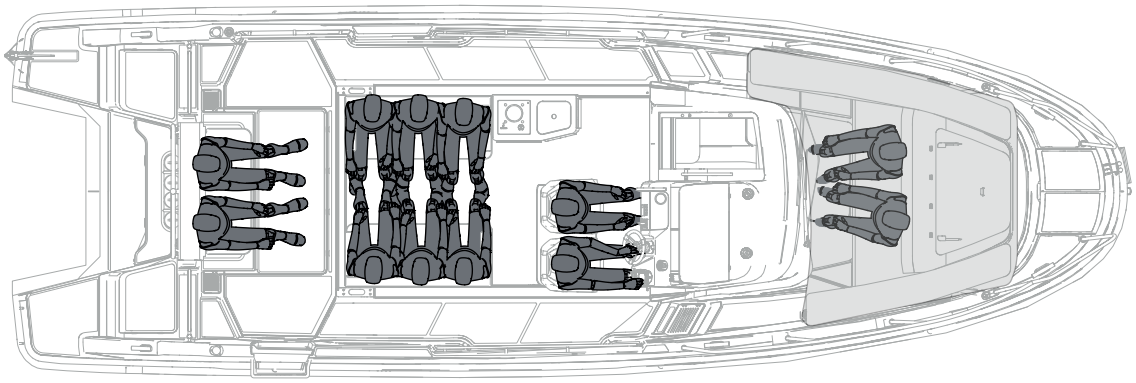

Figure 4.2 Category C seats for a maximum of twelve (12) passengers

4.4 Doors, gates and hatches

4.4.1 Pilot house doors

There are three lockable doors to the pilot house.

© 2026 Inha Works

NOTICE Risk of material damage.

The doors can break if they are slammed shut.

Keep the doors closed when the speed is over 5 knots.

Avoid using the sliding doors on rough seas to prevent them coming off their rails.

Rocking of the boat may cause the doors to close regardless of the latch.

Aft door

The door consist of four folding panels. Two panels open to the left side and two to the right side. The door can be partially opened by opening only the two center panels. When fully opened, each door half folds back on itself and stows against the side wall of the pilot house.

The door can be locked and unlocked from both inside and outside.

Left side door

The door is a two-piece sliding door, with each section operating independently. The rear door section can be locked in either the fully closed or fully open position. The front section has three positions: closed, partially open (ventilation position), or fully open.

The door can only be locked and unlocked from inside the cabin.

Right side door

The door is a three-piece sliding door. The rear section is fixed, while the centre and forward sections operate independently. The centre section can be locked in the fully open and fully closed positions. The forward section has three positions: fully closed, ventilation position, or fully open.

The door can only be locked and unlocked from inside the cabin.

© 2026 Inha Works

4.4.1.1 Pilot house side doors

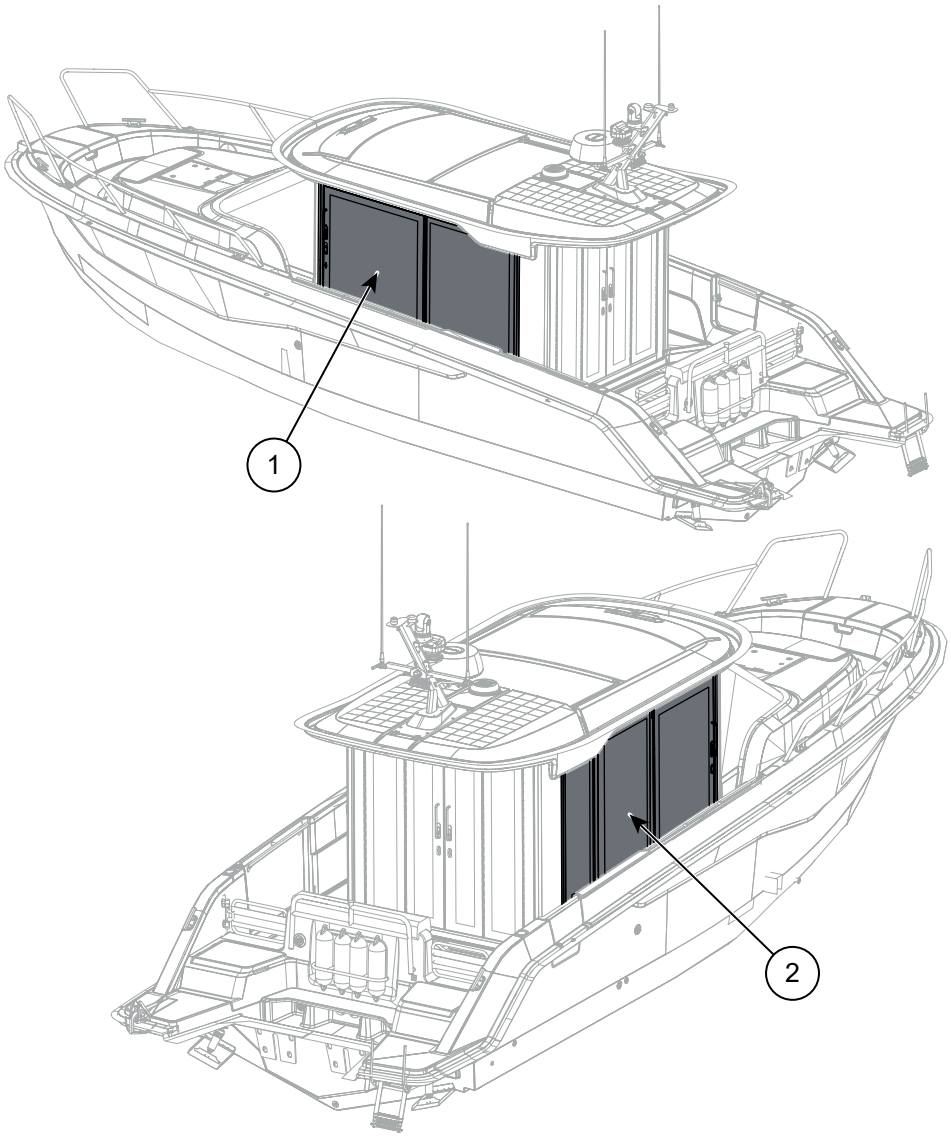

Figure 4.3 Pilot house side door locations

1 Pilot house left side door
2 Pilot house right side door

© 2026 Inha Works

4.4.1.2 Pilot house aft door

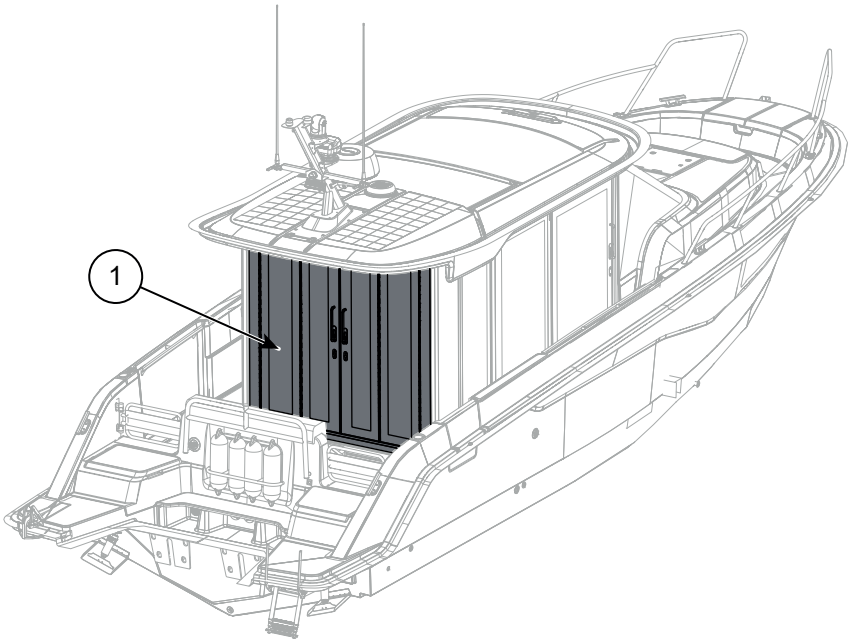

Figure 4.4 Pilot house aft door location

1 Pilot house aft door

4.4.2 Bow cabin door and stairs

The stairs and cabin door provide easy access between the pilothouse and cabin. The cabin door can be secured to a closed or an open position.

⚠ WARNING Risk of injury.

An unsecured cabin door may slam shut while underway and cause injury or damage.

Always secure the door in the open or closed position when operating the boat.

When using the stairs, always maintain three-point contact to keep your balance.

Do not let children use the cabin door or climb the stairs without adult supervision.

© 2026 Inha Works

4.4.2.1 Bow cabin door

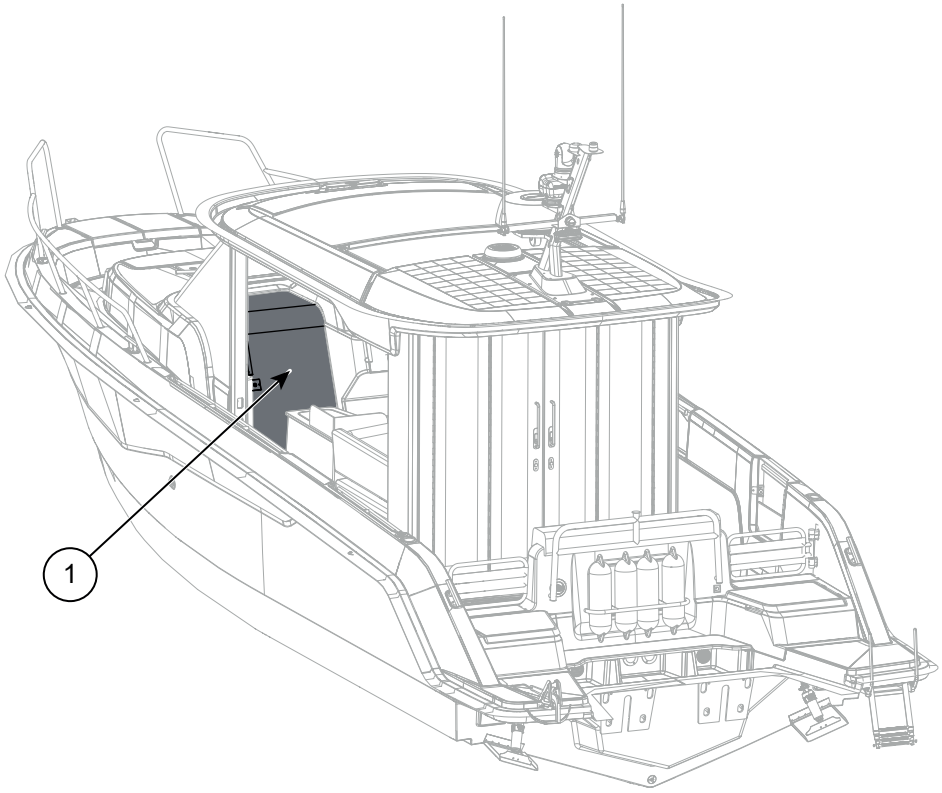

Figure 4.5 Cabin door location

1 Bow cabin door

4.4.3 Bow hatch

The bow hatch provides direct access between the cabin and front deck.

Avoid stepping on the hatch cover. While the cover can support a person's weight, it may scratch or sustain other surface damage if walked on.

Keep the bow hatch closed and locked while driving to prevent water incursion. The hatch has a locking mechanism on the cabin side.

© 2026 Inha Works

4.4.3.1 Bow cabin hatch

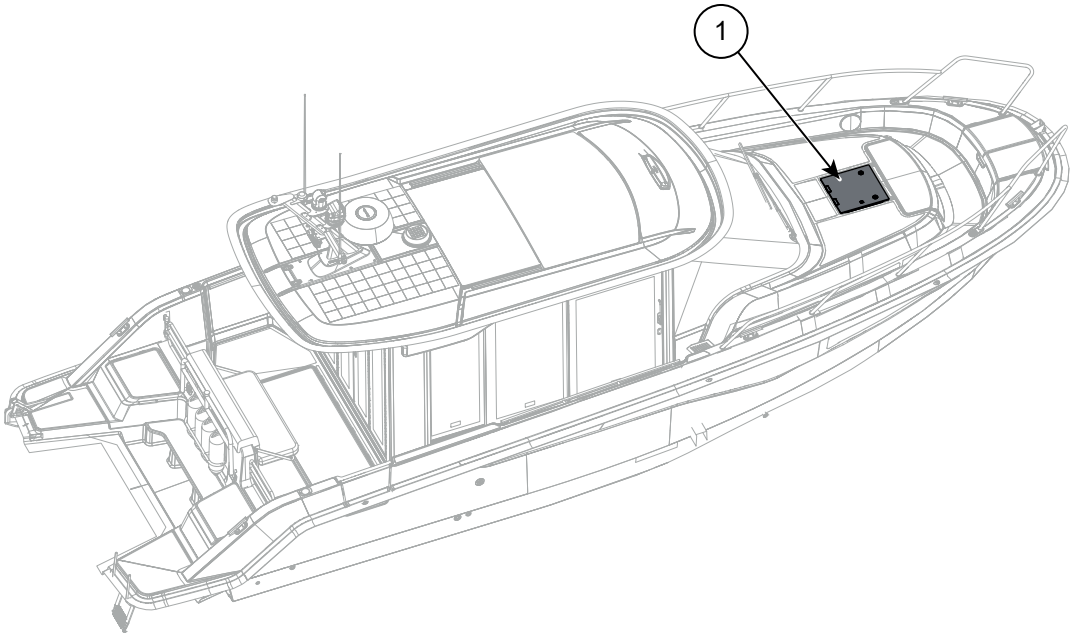

Figure 4.6 Bow hatch location

1 Bow hatch

4.4.4 Sunroof

Your boat can be equipped with an electrically operated glass sunroof.

The sunroof operating switch is located in the sunroof frame, above the helm station. For more information, see the equipment manufacturer's manual.

© 2026 Inha Works

4.4.4.1 Pilot house sunroof

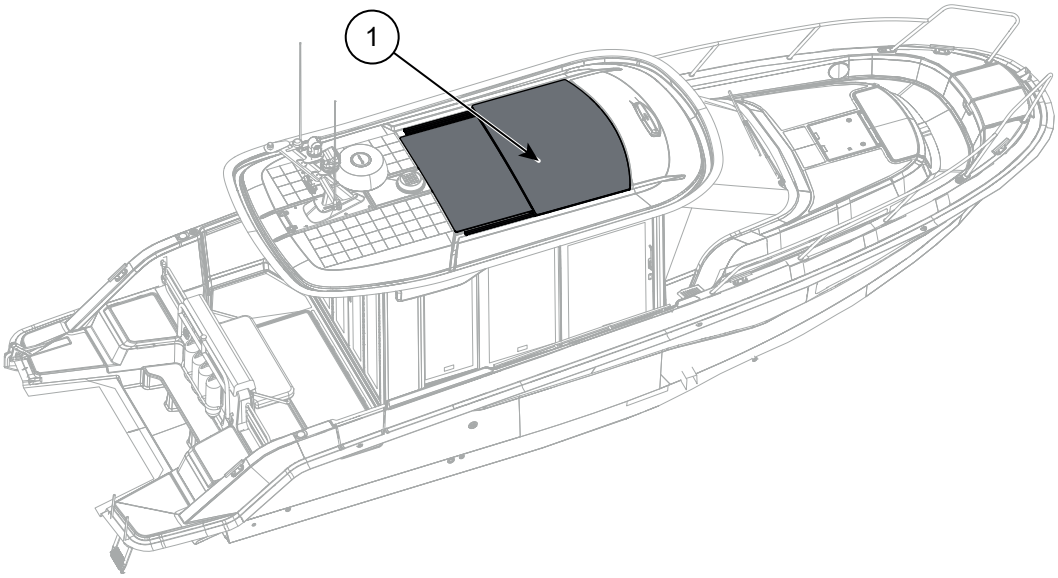

Figure 4.7 Pilot house sunroof location

1 Electric sunroof

4.4.5 Boarding gate

Your boat can be equipped with boarding gates.

The boarding gates are designed to make it easier to board the boat. The aft boarding gates open outwards and side boarding gate inwards.

Make sure that all gates are properly closed and locked when the boat is moving. You can close and lock the gates with a latch.

© 2026 Inha Works

4.4.5.1 Aft boarding gates

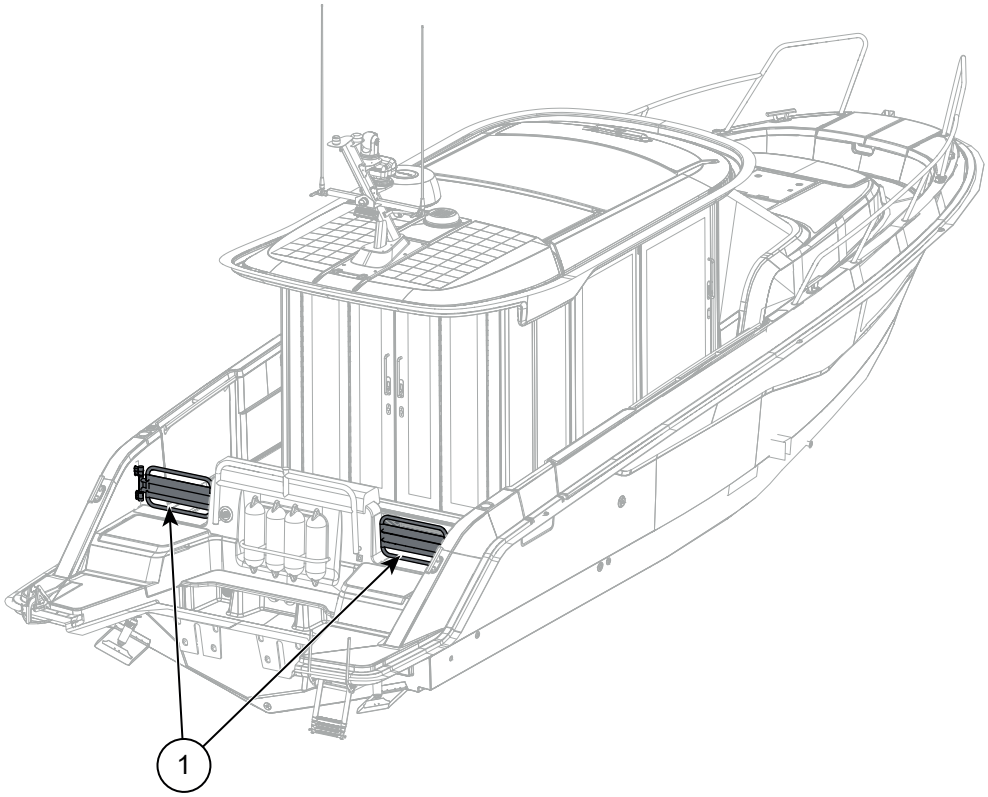

Figure 4.8 Aft boarding gate locations

1 Aft boarding gate

© 2026 Inha Works

4.4.5.2 Side boarding gate

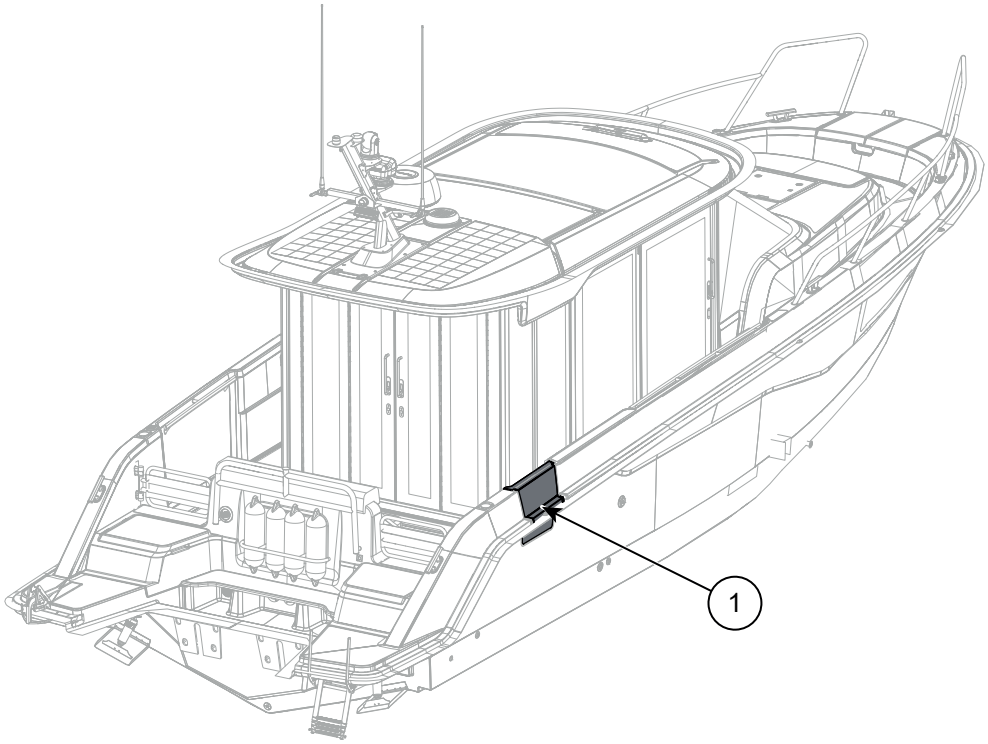

Figure 4.9 Side boarding gate location

1 Side boarding gate

© 2026 Inha Works

5 Operation

5.1 Helm station controls

The helm station contains all the necessary control devices for the boat's handling and operation. Familiarize yourself with the controls before using the boat.



Some of the equipment shown in this section is part of optional accessory packages and might not be part of your boat's configuration.

© 2026 Inha Works

5.1.1 Control device locations

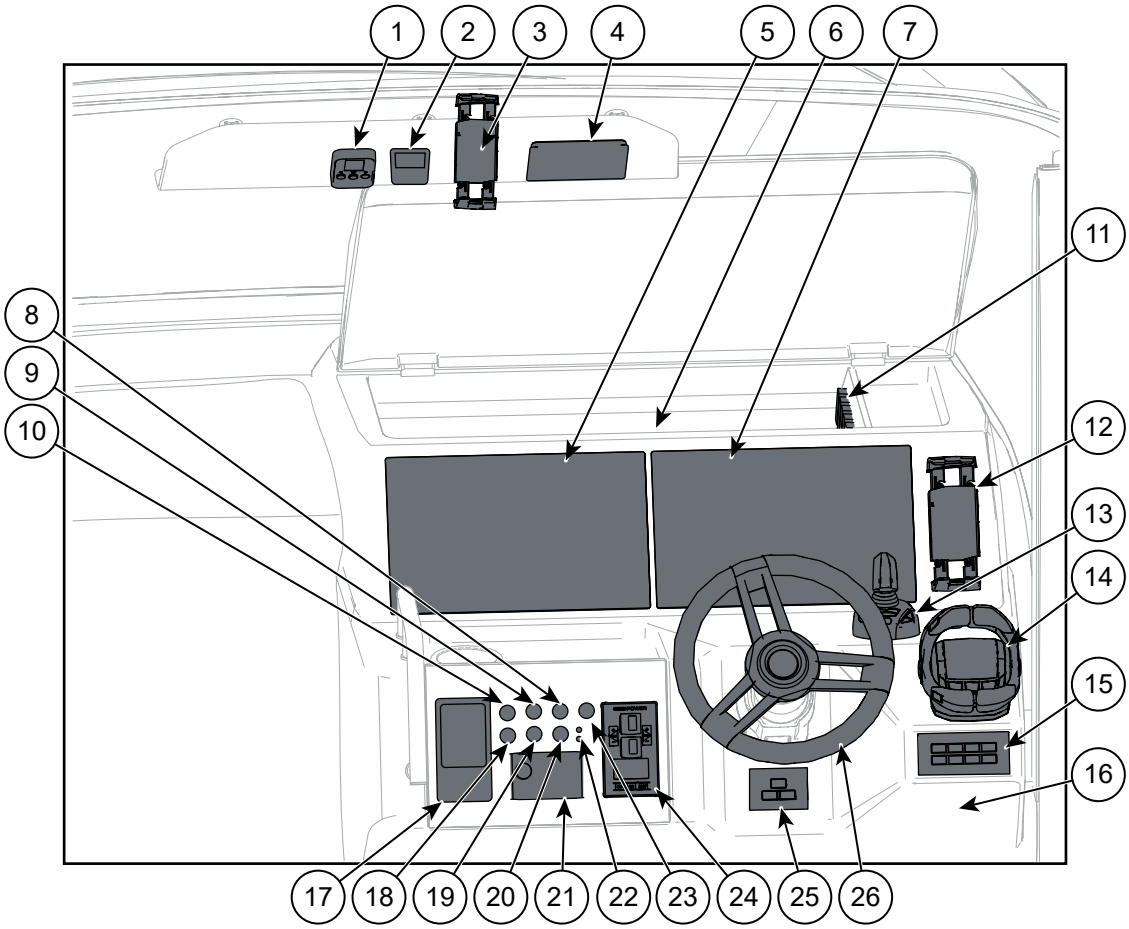

Figure 5.1 Helm station controls

1	Heater control panel
2	Air conditioning control panel
3	Optional placement for wireless charger
4	CL-5 touch screen
5	Yamarin Q+
6	Wireless remote controller charging station
7	Yamarin Q
8	Forward bilge pump switch
9	Anchoring light switch
10	Navigation lights switch
11	Main switch remote switches
12	Optional placement for wireless charger
13	Maneuvering joystick
14	Remote control
15	Autopilot control panel
16	Emergency cut-off switch
17	Wireless VHF/AIS
18	Signal horn switch
19	Windshield wiper switch
20	Windshield wiper speed switch
21	Fusion ERX
22	Bilge pumps' indicators
23	Aft bilge pump switch
24	Bow thruster control panel
25	Power and start buttons
26	Steering wheel

5.1.2 User instructions for controls

The use of some of the electrical equipment is described in the following sections of this manual, complemented with the manufacturers' own manuals.

© 2026 Inha Works

The Yamarin Q user manual is integrated into the Q system interface. To open the manual, navigate to Home → Info → Guides.

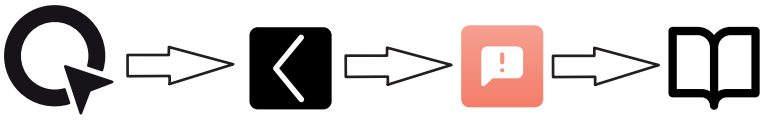

Figure 5.2 Q system user manual

5.2 Driving

As the driver of the boat you are responsible for your own safety and the safety of everyone on board.

⚠ DANGER Rotating propeller

May cause death or severe injury for persons in the water.

Always stop the engine when a swimmer is approaching the boat or climbing aboard.

Learn the seafaring rules and the COLREG provisions (International Regulations for Preventing Collisions at Sea). Always adapt your speed to the prevailing conditions and pay attention to the following:

- Wave height.
- Comfort of your passengers.
- Your own wake. Observe wake wash prohibitions and reduce your speed to minimize the wake for safety and out of courtesy for others.
- Visibility.
- Familiarity of the route.
- Narrow and crowded waterways.
- The time required for necessary stops and the space for evasive manoeuvers.

5.2.1 Emergency cut-off switch

The engine is set up with an emergency cut-off switch that shuts down the engine if the driver falls overboard or sways out of position. It is crucial that the engine stops if you are driving alone and go overboard or fall down.

⚠ WARNING Loss of steering control

The release of the cut-off switch stops the engine and causes the boat to slow down rapidly and lose most of the steering control. This may cause people and objects to be thrown forward and result in death or severe injury.

Make sure that all passengers are properly seated while you are driving the boat.

Adjust the cut-off cord length so you can easily reach all control devices without the risk of accidentally releasing the switch.

© 2026 Inha Works

- Attach the emergency cut-off cord to yourself as soon as you have released the mooring lines.
- Do not attach the cut-off cord to clothing that could tear loose.
- Do not route the cord in a way that could cause it to entangle and stop functioning.
- Detach the cut-off cord before leaving the boat to avoid stopping the engine unintentionally.

Test regularly that the emergency cut-off switch is functioning.

- To make sure that the clip will release, pull the cord in every possible direction.
- Make sure that the clip stays firmly in place but does not need excessive force to come off.

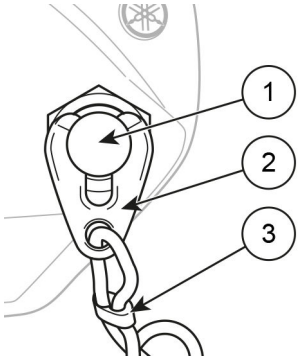

Figure 5.3 Emergency cut-off switch

1	Engine cut-off switch	3	Engine cut-off cord
2	Clip		

If you notice any issues in the switch operation, contact your local Yamaha dealer for check-up and maintenance.

Refer to the engine manual for more information on the emergency cut-off switch.

5.2.2 Approaching and leaving the dock

Practice boat maneouvering skills in places where it can be done safely, before entering a crowded marina. The propeller is designed to provide the best thrust in forward gear. This makes the steering response weaker when reversing.

⚠ WARNING High-speed operation

May cause severe injury or equipment damage.

Reduce speed when approaching stopping areas.

Learn to estimate the distance it takes to safely come to a stop from planing.

Verify you have adequate stopping distance before planing the boat.

When docking:

- Do not try to stop the boat with your hands while docking. Never put your hand of foot between the boat and the dock, the shore or another boat.
- Use sharp but short applications of throttle to generate enough rudder authority.

© 2O26 Inha Works

- Ensure that as many passengers as possible remain seated while docking. Sudden steering movements may cause the boat to heel and cause injury.
- Prepare the mooring lines and fenders at the bow and stern before docking.
- Approach the dock with the bow first at an acute angle. Just before touching the dock, steer into it and shift into reverse.
- Apply throttle quickly and sharply. The boat will stop and turn parallel to the dock.
- Make the approach into the wind or current if possible, whichever is stronger. This makes departing easier.



When securing the boat, take into consideration the prevailing conditions, such as:

- Possibility of changes in wind direction.
- Changes in the water level.
- Waves and wake wash from other boats.

When departing:

- Push the stern as far out from the dock as possible
- Slowly reverse away from the dock into open water.

5.2.3 Visibility from the steering position

It is easy to drive the boat in fair weather when the sea is calm, but always remember to keep lookout as specified in international waterway rules (COLREG). Ensure maximum visibility from the steering position at all times by following these guidelines:

- Position crew and passengers so that they do not obstruct the driver's visibility.
- Do not drive at the planing threshold speed for extended periods as a raised bow blocks forward visibility.
- Use the engine's trim function (power trim), and trim tabs if any, to adjust the bow so that visibility is not compromised.
- Use the windshield wipers when necessary.
- Remember to look behind the boat, especially in fairways where fast vessels may overtake you.
- Give way to faster ships in narrow fairways, especially if they cannot otherwise overtake you safely because of limited space.
- Use the navigation lights during darkness or when visibility is limited for any other reason, such as fog or heavy rain.

5.2.4 Driving at high speed

If the engine has an electro-hydraulic power trim, the basic trim angle adjustments are as follows:

- To plane the boat, adjust the trim all the way down (bow down).
- When the boat is planing in low waves, raise the trim until the boat starts to porpoise, the propeller loses grip or the engine reaches the upper limit of the normal adjustment range. When

© 2026 Inha Works

this happens, lower the bow slightly until the ride is stable. The log (speed indicator) can be used to optimise the trim angle.

- When the boat is riding into waves, lower the bow until the ride becomes smooth. When driving with a tailwind or driving into very high waves the raise the bow slightly to avoid ploughing through the waves.
- Do not drive the boat at a high speed with a fully negative trim angle (bow down) as this may cause the boat to roll from side to side and make steering unstable.

Consult the engine manual for more information.

⚠ WARNING At full speed the boat's handling characteristics may deteriorate.

- Do not drive the boat with the bow too low because this could cause the boat to behave erratically.
- Be very careful when adjusting the trim angle at a high speed: it may radically affect the boat's behaviour.
- Sudden turns at a high speed may result in loss of control. Slow down before sharp turns.
- Waves reduce the boat's manoeuverability and can cause the boat to swing fromside to side. Reduce the speed when wave height increases.

5.2.5 Operating the joystick

The helm station console is equipped with a fixed manoeuvring joystick. Use the joystick to manoeuvre the boat more smoothly at slow speeds.

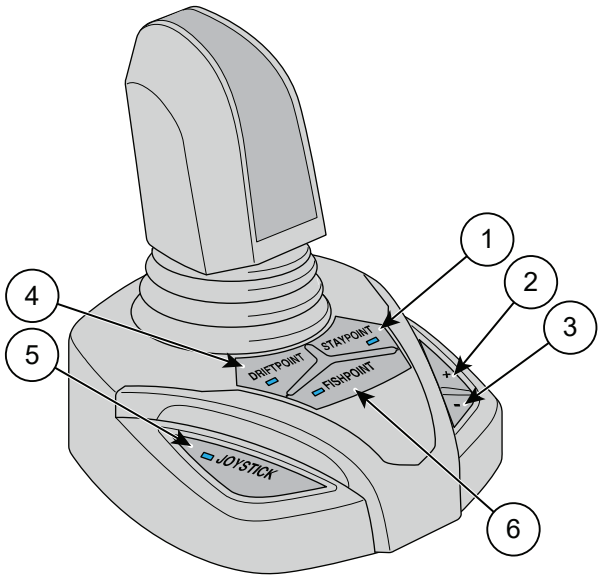

Figure 5.4 Joystick and function buttons

1	Staypoint button	4	Driftpoint button
2	Plus (+) button	5	Joystick button
3	Minus (-) button	6	Fishpoint button

© 2026 Inha Works

Activating the joystick

1. Position the remote control and the joystick to neutral position and press the **JOYSTICK** button on the joystick base.

   An indicator LED on the button lights up to show that the joystick is active.

2. To return to normal operating mode, press the **JOYSTICK** button again. Alternatively, activate the forward or reverse gear by turning the remote control lever.

Manoeuvring the boat with the joystick

- Push the joystick forward to move the boat forward. Pull the joystick backwards to make the boat reverse.
- Push the joystick left to move the boat left. Push the joystick right to move the boat right.
- Twist the joystick to turn the boat around its axle.
- Turn the joystick left, right or diagonally to make the boat move to the desired direction.
- Push the joystick forward and twist it to move the boat forward while turning to direction of the twist. Pull the joystick backward and twist it to move the boat backward while turning to direction of the twist.
- Use the plus **(+)** and minus **(-)** buttons to adjust the engine speed in Driftpoint, Fishpoint and Joystick operation modes. The speed adjustment has five different levels.

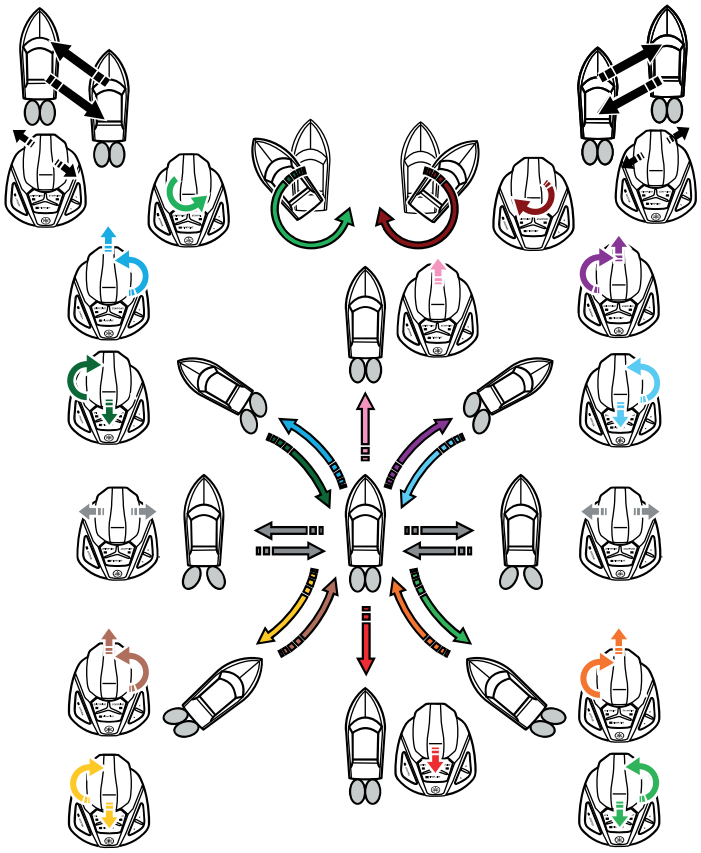

Figure 5.5 Joystick operation with a twin engine boat

For more information on the Driftpoint, Staypoint and Fishpoint functions, see the separate Autopilot user manual.

You can calibrate the joystick via the CL-5 display. For more information, see the CL-5 user manual.

© 2026 Inha Works

For more detailed instructions on the joystick, see the Joystick Quick Guide that is delivered with your boat.

5.2.5.1 Integrated bow thruster controller

Your boat can be equipped with a feature that allows you to control the bow thruster using the Yamaha joystick.

Activating the integrated controlling

1. On the autopilot panel, press **F1** button.
2. Activate the joystick by positioning the remote control and the joystick to neutral position and pressing the **JOYSTICK** button on the joystick base.

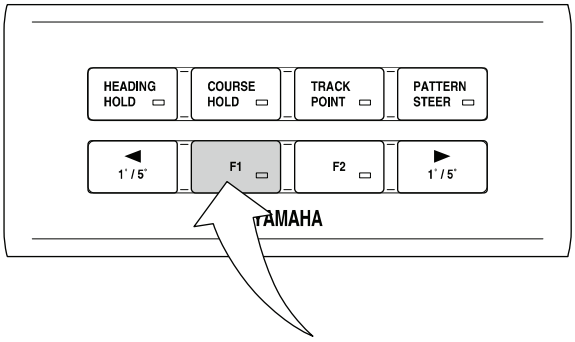

Figure 5.6 Autopilot control panel

- When the integration is activated, you can control the bow thruster with both the bow thruster controller and the Yamaha joystick.
- If the control devices are used simultaneously, the one with a larger input value is dominant. If the inputs from the two devices are in opposite directions, the bow thruster is not affected.
- The **F1** button stays activated until you switch it off. This allows you to switch to an alternative helm station or joystick station, if applicable, and use the integration from there.

Controlling joystick with bow thruster integration

The joystick controls are the same as without integration. With integration bow thruster operation is added automatically to help move the boat.

- The controls are proportional, so you can add as much of force to the thruster as you wish. When done correctly, the boat can almost travel sideways.
- Use the plus **(+)** and minus **(-)** buttons to adjust the engine speed in five levels.
- To return to normal operating mode, press the **JOYSTICK** button again. Alternatively, activate the forward or reverse gear by turning the remote control lever.

5.2.6 Operating the wireless control station

The optional wireless control station allows you to manoeuvre the boat from any location on board. The station consists of a wireless controller, Man Overboard (MOB) tags and a charging cradle.

© 2O26 Inha Works

⚠ WARNING Loss of boat control

Loss of control of the boat may cause death, serious injury or material damage.

Always remain on board the boat when operating the wireless control station.

Do not use the wireless controller to control the boat remotely from outside the boat.

⚠ WARNING Risk of falling overboard

Falling overboard may cause death or serious injury.

Always wear the MOB tag when operating the wireless control station.

Activating the wireless controller

1. On the helm station console, press the **POWER** button to turn on the boat's power.
2. Press the **START/STOP** button to turn on the engines.
3. On the wireless controller, press the power button to turn it on.
4. Press the **JOYSTICK** button on the controller.

   The wireless controller mode is now activated.

To end wireless operation press the power button on the wireless controller to turn off the power. Alternatively, press the station selector switch on the remote control device.

© 2026 Inha Works



Figure 5.7 Wireless controller and function buttons

1	Twist lever	7	Point of Interest (POI) button
2	Joystick	8	AP MODE button (Autopilot mode)
3	START/STOP button	9	Plus (+) and minus (-), Menu and back buttons
4	Power button	10	JOYSTICK button
5	POINT button	11	Display
6	ON/OFF, Up/Down buttons		

Manoeuvring the boat with the wireless controller

- The joystick on the wireless controller has the same control functions as the fixed maneuvering joystick at the helm station. See *5.2.5 Operating the joystick on page 36*.
- Moving the wireless joystick forward, backward, or sideways produces the same boat response as the helm station joystick.
- Pressing the twist lever performs the same function as twisting the helm station joystick.
- The controller display shows relevant information on functions, such as the controller battery status and signal strength, boat speed, and boat heading.

To recharge the controller, place it in the charging cradle or connect a USB-C cable to the port on the bottom of the controller.

Before operating the wireless station, read the provided wireless station operation manual. It contains the detailed instruction for use and safety.

5.2.6.1 Man Overboard tags

The Man Overboard (MOB) tag is a wireless emergency switch that shuts down the engines and alerts the crew if the driver falls overboard while using the wireless control station.

© 2026 Inha Works

⚠ WARNING Loss of steering control

If the captain MOB tag moves out of communication range or gets wet, the engines stop and the boat may slow down rapidly and lose steering control. This may cause people and objects to be thrown forward and result in death or serious injury.

Attach the MOB tag securely to the driver's clothing or wrist. Ensure that the tag remains attached while the boat is underway.

When operating the boat from the wireless control station, the driver does not need to use the emergency cut-off switch at the helm station, but the driver must wear the captain MOB tag at all times.

To avoid triggering a false alarm on the boat, remove the MOB tag before leaving the boat.

The wireless station includes two MOB tags.

- One (1) black captain tag.
- One (1) white passenger tag.

You can pair one captain tag at a time and up to seven passenger tags at the same time. You can use a carabiner or wristband to attach the tag securely.

Captain MOB tag

The boat driver wears the black MOB tag, which is labeled **CAPTAIN**. Only the captain tag functions as the engine shut down switch. If the person wearing the captain tag falls overboard the following happens.

- The boat slows down and gradually comes to a stop.
- A warning message appears on the helm station multifunction screen.
- A warning message appears on the wireless controller.

Passenger MOB tag

The passenger MOB tag is white and labeled **PASSENGER**. If the person wearing the passenger tag falls overboard the following happens.

- A warning message appears on the helm station multifunction screen.
- A warning message appears on the wireless controller.
- The messages inform the driver to take appropriate action.

© 2026 Inha Works

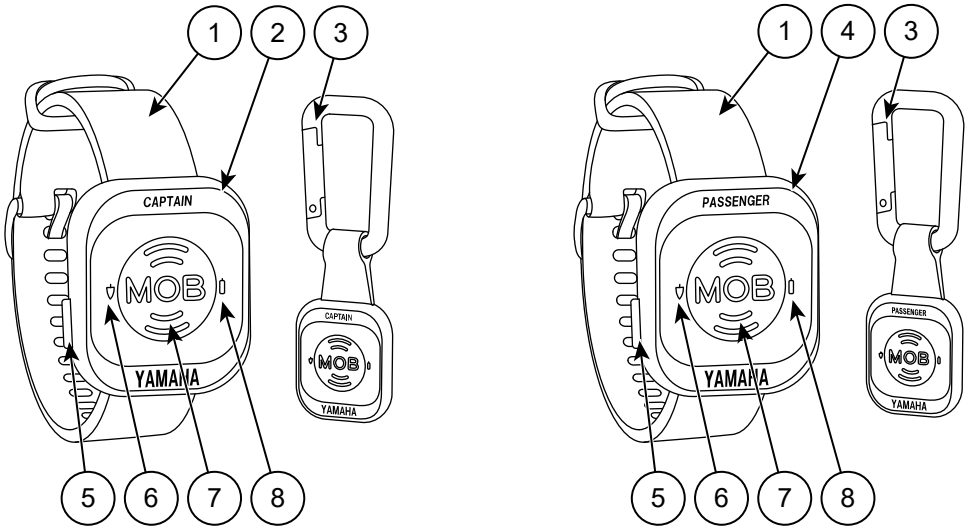

Figure 5.8 Wireless MOB tags for driver and passenger

1	Wristband	5	Power switch
2	Captain tag (black)	6	Status indicator LED
3	Carabiner	7	MOB switch
4	Passenger tag (white)	8	Battery indicator LED

For more information on the MOB tag functions and how to pair them, see the wireless station operation manual.

5.2.7 Automatic trim system

Your boat is equipped with an interceptor-type automatic trim system. The system adjusts the boat's trim and roll rate automatically to maintain a comfortable and efficient running attitude.

The system is in AUTO mode by default. Manual operation is possible through the dedicated application on the Yamarin Q display.

To open the automatic trim system application, navigate to Home → Trim system application.

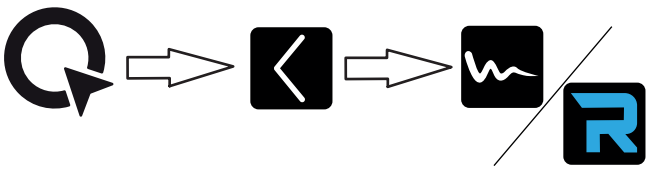

Figure 5.9 Automatic trim system

For more detailed instruction on how to operate the trim system, see the equipment manufacturer's manual.

© 2026 Inha Works

5.2.7.1 Automatic trim system components

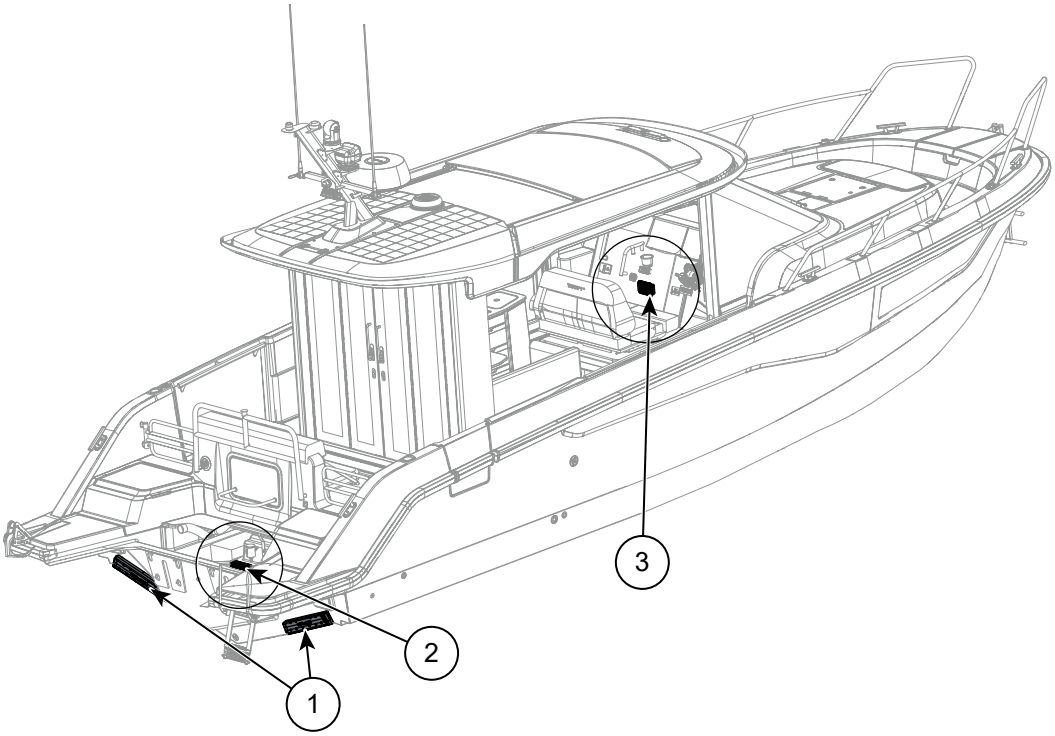

Figure 5.1O Yamarin Aura Cabin trim system components

1	Interceptor plates	3	Integration module
2	Distributor unit		

5.2.8 Adjusting the trim tabs

Use the trim tabs to balance the boat's heel when travelling in a crosswind or with an unbalanced load. Note the following:

- When the boat is planing it will lean into the wind. Lower the windward trim tab to counteract this.
- To further reduce the waves' effect on the boat, trim the windward side up. This will lift the boat slightly above the waves.

⚠ WARNING

- Too rapid adjustments change the way the boat behaves. Adjust the trim tabs carefully when driving at high speeds.
- Waves reduce manoeuverability and make the boat heel. Reduce the speed when driving in large waves.

5.2.9 Using windshield wiper and washer

Your boat is equipped with a windshield wiper and washer. The wiper has a three-speed control to accommodate different weather conditions.

© 2026 Inha Works

NOTICE Risk of material damage.

To avoid possible damage by freezing, empty the washer system before winter lay-up.

Only use clean water or mild washing fluid suitable for windshield in the washer system.

- Turn on the wiper by pressing the windshield wiper switch at the helm station.
- To increase the wiper speed, press the windshield wiper speed switch.
- When the wiper reaches the third speed (fastest), press the switch once more to return it to the first speed (slowest).
- To activate the windshield washer, press and hold the windshield wiper speed switch for three (3) seconds.

  The washer pump sprays fluid onto the windshield for as long as you hold down the switch.

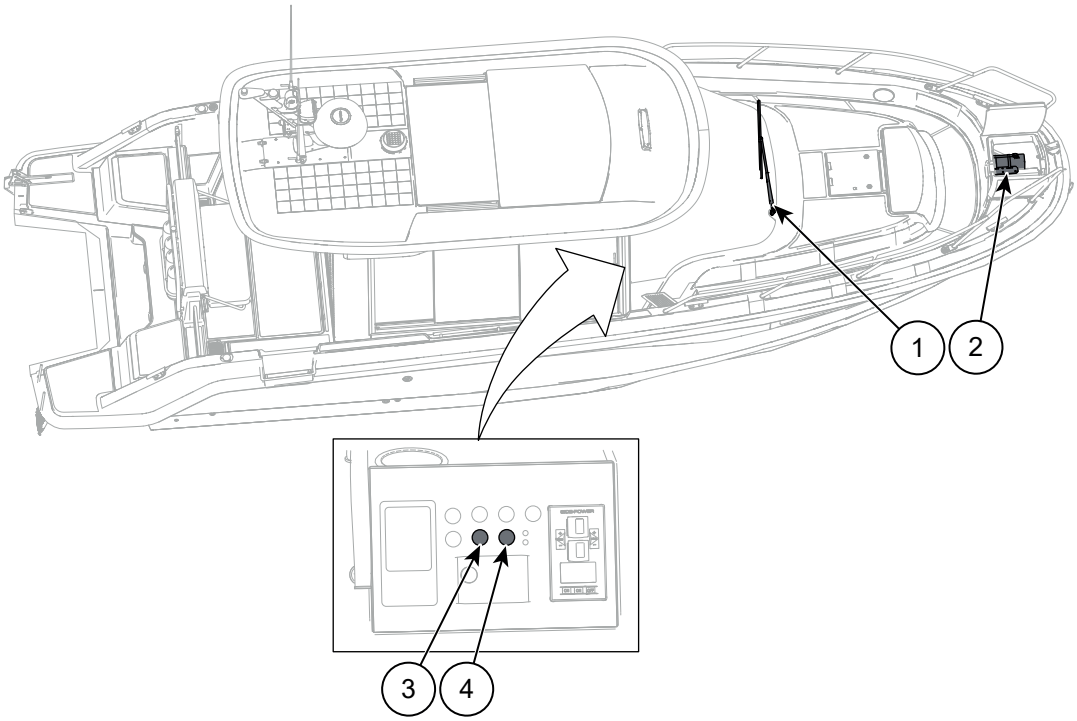

Figure 5.11 Windshield wiper system components

1	Windshield wiper	3	Windshield wiper switch
2	Washer fluid reservoir with integrated pump*	4	Windshield wiper speed switch

*The fluid reservoir is located under the bow hatch.

5.3 Mooring, anchoring and towing

When you are mooring, anchoring or towing the boat, use only the mooring points shown in the picture. Ensure that the lines, ropes and chains, as well as the anchors, are suitable for their intended use.

© 2026 Inha Works

⚠ WARNING Risk of injury

Never try to stop the boat by hand or place your hand or foot between the boat and the pier, shore or another boat.

Practise mooring in fair weather. Use engine power sparingly but resolutely.

Your boat has either a hardened bow eye for locking and trailering, or a bow eye for trailering and a separate hardened locking eye on the deck.

- Use the bow eye for winching the boat onto a trailer or sliding dock, and use the hardened locking eye for locking the boat.
- If your boat has a single hardened bow eye, you can use it for both winching and locking.

NOTICE Risk of material damage.

The bow and locking eyes are only intended for trailering and locking the boat.

Do not use the eyes for any other purpose, such as mooring or towing, or other use that could cause lateral stress.

Mooring

- Use mooring lines, ropes and chains with a breaking strength that do not exceed 80 percent of the rated strength of the mooring points. See *3.3 Technical specifications on page 18*.
- Use mooring ropes equipped with shock-absorbing springs.
- Avoid mooring with the stern against the wind as high waves may crash over the stern.
- Take into account potential changes in the wind direction, changes in water level, waves and wake wash from other boats.
- Use sufficiently large fenders to prevent abrasion.

NOTICE Do not use the mooring points for lifting the boat.

Anchoring

- Make sure the depth is sufficient when anchoring at a natural harbour and anchor sufficiently far from the shore.
- For the anchor to get a good hold ensure that the length of anchoring line equals 4 to 5 times the depth. To increase the hold further, release more rope.
- You can increase the hold of the anchor significantly by using weighted rope or chain on the first 3 to 5 meters of the anchoring line.

Towing

- Use a sufficiently strong, floating towing line when towing another boat.
- Start towing gently and avoid shocks.
- Do not overload the engine.
- When towing a small dinghy, adjust the line length so that the dinghy rides on the downhill slope of your wake.

© 2026 Inha Works

- In narrow straits and high waves, bring the dinghy closer to the transom to stabilise its movement.
- Fasten all equipment in the dinghy in place securely in case the dinghy capsizes.
- When on the open sea, cover the dinghy to prevent flooding due to spray and splashing from waves.

⚠ WARNING If the towing line snaps, the loose end could cause death or serious injury.

Always use a sufficiently strong towing line and avoid being directly in front of the towing line.

5.3.1 Attachment points

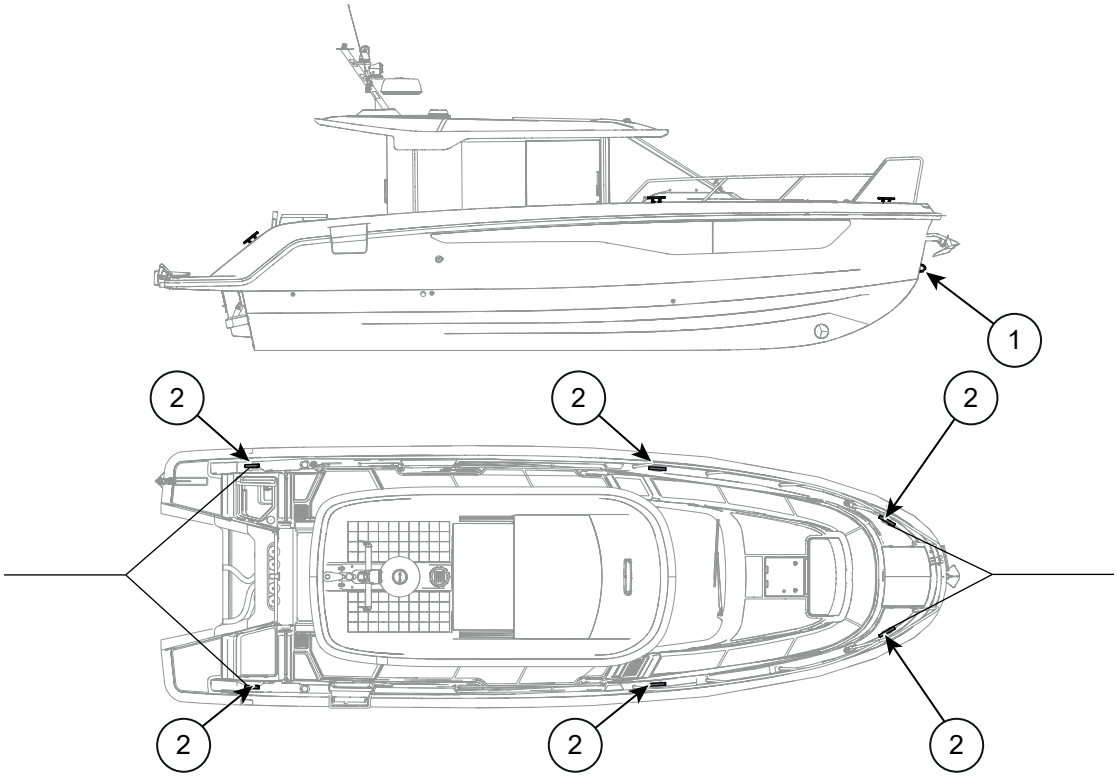

Figure 5.12 Mooring and towing points

1 Hardened eye for locking and trailering
2 Mooring points

© 2O26 Inha Works

6 Fuel system

The boat has a fixed fuel tank attached to the bilge area, close to the transom.

⚠ WARNING Do not modify the fuel system.

Modifications can lead to overflow.

The fuel meter indication on the helm station screens is for reference only. Make sure you carry enough fuel to reach your destination.

6.1 Fuel system components

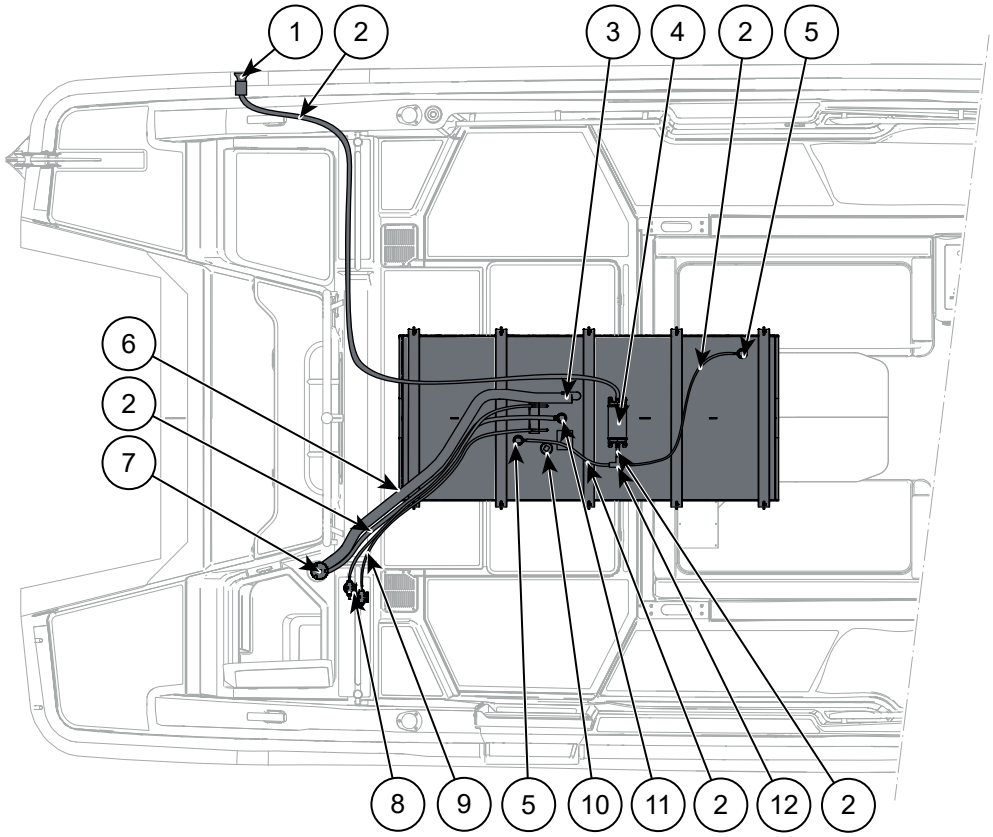

Figure 6.1 Fuel system components

1	P-trap and breather through vent	7	Fuel filler and breather
2	Breather hose	8	Fuel filters
3	Inlet check valve	9	Suction hoses
4	Carbon canister	10	Fuel sensor
5	Tank vent valve	11	Fill limit valve
6	Filler hose	12	Y-valve

© 2026 Inha Works

6.2 Refueling and maintenance

For the location of the fuel inlet, see *2.3 Safety labels on page 12*.

⚠ WARNING Risk of fire! Take extra caution when refueling:

- Before filling the fuel tank, stop the engine and extinguish any naked flames and cigarettes.
- Do not operate any electrical equipment when refueling.
- If you refuel your boat at a petrol station, do not use a plastic funnel that prevents the static charge between the pistol and the fuel inlet from discharging.
- After filling the tank, make sure that no fuel has spilled into the bilge. Clean up any splashes of fuel immediately.

For maintenance:

- Check the fuel lines annually for wear and tear.
- Regularly check the fuel filter to ensure that there is no water in the moisture trap, which is located under the filter.
- Change the fuel filter 1-2 times a year depending on the engine hours and quality of fuel.

6.3 Fuel-operated equipment

The boat is equipped with a diesel fuel tank for powering fuel-driven equipment. Depending on the availability of options for your boat model, the boat may be equipped with:

- Stove
- Heater with a single heating unit that functions as an air heater
- Water heater with a combi heating unit that functions as an air heater as well as a water heater

© 2026 Inha Works

6.3.1 Fuel-operated equipment components

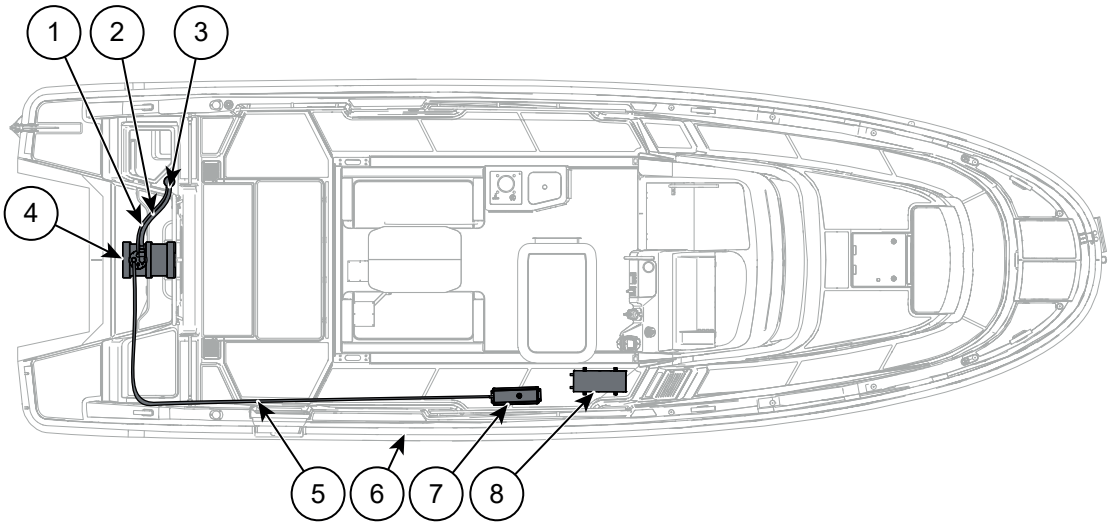

Figure 6.2 Fuel-operated equipment

1	Breather hose	5	Suction line
2	Filler hose	6	Heater exhaust
3	Diesel filler and breather	7	Heater or combi heater
4	Diesel tank	8	Water boiler

6.3.2 Heater

The diesel heater is an optional feature and its operation is described in a separate manufacturer's manual. It is connected to an on/off type fuse, which also functions as a main switch for the device. The location of the heater and heater controls are presented in the image in section *6.3 Fuel-operated equipment on page 48*.

- Always turn off the heater when refueling.
- Clean up any fuel spills immediately.

NOTICE Do not close the heater's warm air vent when it is switched on. This can cause the heater to overheat and engage the overheat protection.

6.3.3 Water heater

The water heater is an optional feature and its operation is described in a separate manufacturer's manual. It is connected to an on/off type fuse, which also functions as a main switch for the device.

- Always turn off the water heater when refueling.

© 2026 Inha Works

7 Engine

The engine has its own manual that is provided with the boat. Refer to engine manual for more detailed instructions of use and proper maintenance.

7.1 Starting engines

The ignition is controlled by a button located either on the steering console or on the base of the throttle handle, depending on the boat model or accessories.

1. Switch on the power using the main power switches.
2. Lower the engines into the driving position by pressing the power trim button on the gear/throttle handle.
3. Check that the gears are in a neutral position and that the emergency switch is attached to the emergency cut-off switch.
4. Switch on the ignition using the power button on the steering console/throttle handle base and wait a few seconds for the warning lights to light up.
5. Start the engines by pressing the start button until the engines starts. The engines should start within 1-2 seconds. Do not try to start the engines for more than 10 seconds at a time.

   If your boat is equipped with external power/start switch panel, both engines must to be started individually. Start button on the throttle handle base starts both engines at the same time.

6. Let the engines idle for a few minutes before setting off.

Read the engine manual for more detailed information about the engine.

7.2 Using gearshift and throttle

The remote control functions as a throttle, forward and reverse gearshift and the engine trim angle controller. Twin engine installations come with twin handle remote controller. Each handle controls one engine.

NOTICE Risk of material damage.

Do not shift into reverse while travelling at higher speeds as this damages the engine.

- Put the engine into gear by pushing the button on the gear/throttle handle upward and by pushing or pulling the gear/throttle handle forward or backwards.

  Electric remote control does not have a neutral lock button on the handle.

- When the engine is in gear, adjust the speed using the gear/throttle handle.
- When the boat is travelling forward at a slow speed, you can use the reverse gear for braking.

© 2026 Inha Works

For more information on using the remote control, see a separate equipment manufacturer's manual.

© 2026 Inha Works

8 Electrical system

8.1 System description

The boat is equipped with a 12 volt electrical system.

The boat's electrical components vary depending on the equipment level. For details, see section *8.5 Electrical equipment on page 59*.

Most of the controllers for the equipment are located at the helm station. For more details, see *5.1 Helm station controls on page 31*.

In addition, the engine is an essential part of the boat's electrical system; it both generates and consumes power.

⚠ WARNING Do not alter the boat's electrical system or associated diagrams. Only a skilled boat electrician is allowed to modify and service the system.

8.2 Main switch and fuse panel

The main switch and applicable fuse panels are located as indicated in the diagram. Every battery in the boat's electrical system has its own dedicated main switch.

The main switch has the symbols **O** = off and **I** = on. Switch off the current using the main switch:

- When leaving the boat unattended.
- Before performing any electrical installation or maintenance work.

Your boat can be equipped with remote controlled main switches. The remote control switches are located on the driving console. For detailed location, see *5.1.1 Control device locations on page 32*.

⚠ WARNING Improper alteration of overcurrent device ratings

May cause injury or equipment damage.

Never alter or modify the rated current amperage of overcurrent protective devices

⚠ WARNING Improper component amperage

May cause injury or equipment damage.

Never replace electrical appliances or devices with components which exceed the rated current amperage of the circuit.

Verify component rating before installation.

NOTICE Electrical fault

If a fuse keeps popping after being reset, consult a qualified marine electrician.

© 2026 Inha Works

The automatic bilge pump and the Q-system remote operation circuits remain operational whenever the battery is attached to the electrical system, regardless of the position of the main switch.

The boat uses automatic fuses, which enable the current to be switched back on following a circuit overload. If a button has popped up, switch the current back on by pressing the button down.

Depending on the model and equipment level, the boat's electrical system has 1–3 redundant circuits equipped with fuses. These circuits can be used for retrofitting additional equipment. The identifiers and the names of the fuses are shown in the wiring diagrams available in the manual appendices.

8.2.1 Switch and fuse descriptions

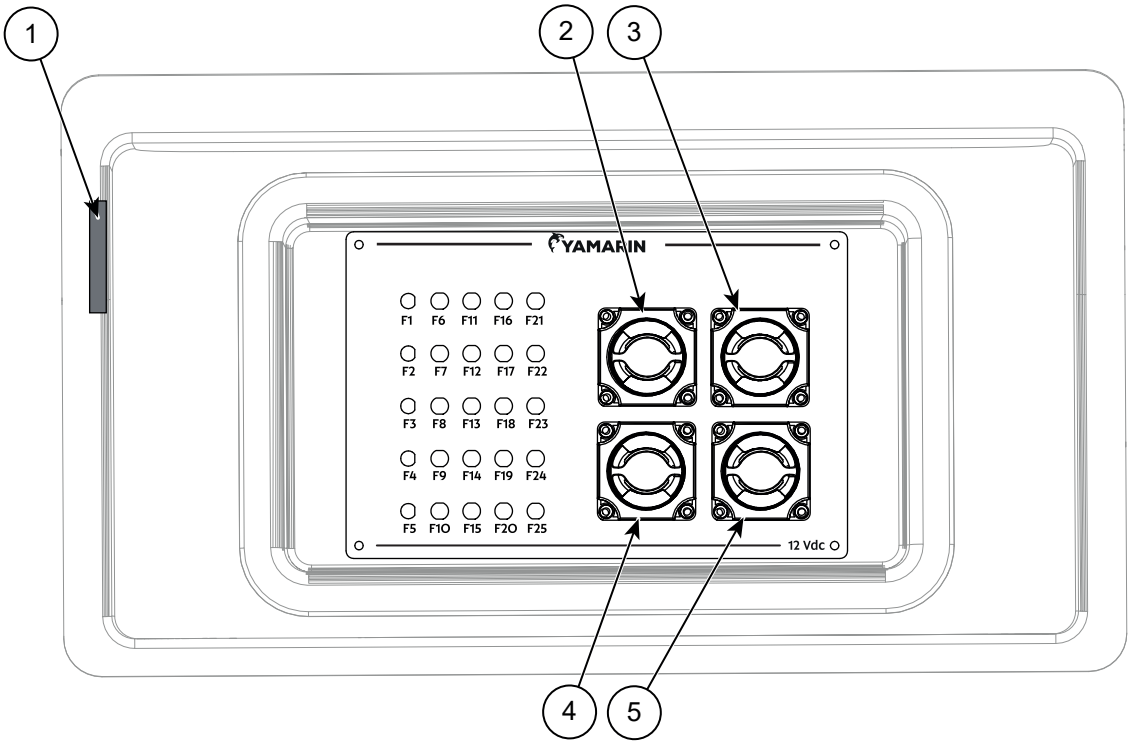

Figure 8.1 Aft fuse panel and main switches

Position	Description	Amperage	Position	Description	Amperage
1	Inverter main switch		F11	Atmos pump	15 A
2	Port side engine main switch*		F12	Sump pump	10 A
3	Starboard side main switch*		F13	Extra	15 A
4	Service battery 1 main switch*		F14	Gyro	10 A
5	Service battery 2 main switch*		F15	Fusion Black Box	15 A

© 2026 Inha Works

Position	Description	Amperage	Position	Description	Amperage
F1	Stove**	15 A	F16	4G router	5 A
F2	Heater**	15 A	F17	Gen control	20 A
F3	Clean water pump**	10 A	F18	Air conditioning control	10 A
F4	Water pump**	10 A	F19	Heater blower	15 A
F5	Deck wash water pump**	15 A	F20	Amplifier	50 A
F6	Yamarin Q	10 A	F21	Wireles unit	5 A
F7	Bilge pump aft	5 A	F22	Extra	5 A
F8	Bilge pump forward	5 A	F23	Extra	7 A
F9	Spare	10 A	F24	Extra	20 A
F10	Cool box	15 A	F25	Amplifier	50 A

* If the boat is not equipped with remote controlled main switches

** On/off type fuse that functions as a main switch

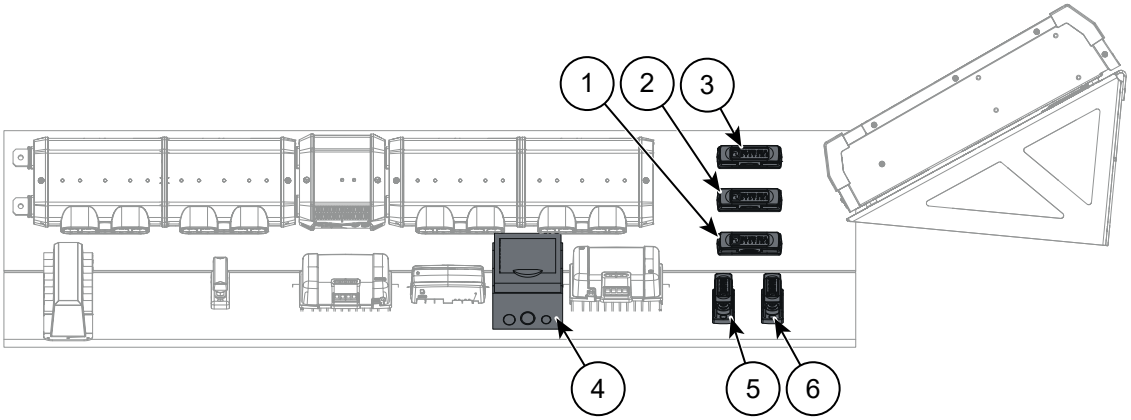

Figure 8.2 Mid cabin technical space fuses

Position	Description	Amperage	Position	Description	Amperage
1	Bow fuse panel main fuse	100 A	4	Solar panel fuses	16 A
2	Digiswitch main fuse	100 A	5	DC/DC in main fuse	70 A
3	Aft fuse panel main fuse	100 A	6	DC/DC out main fuse	70 A

© 2026 Inha Works

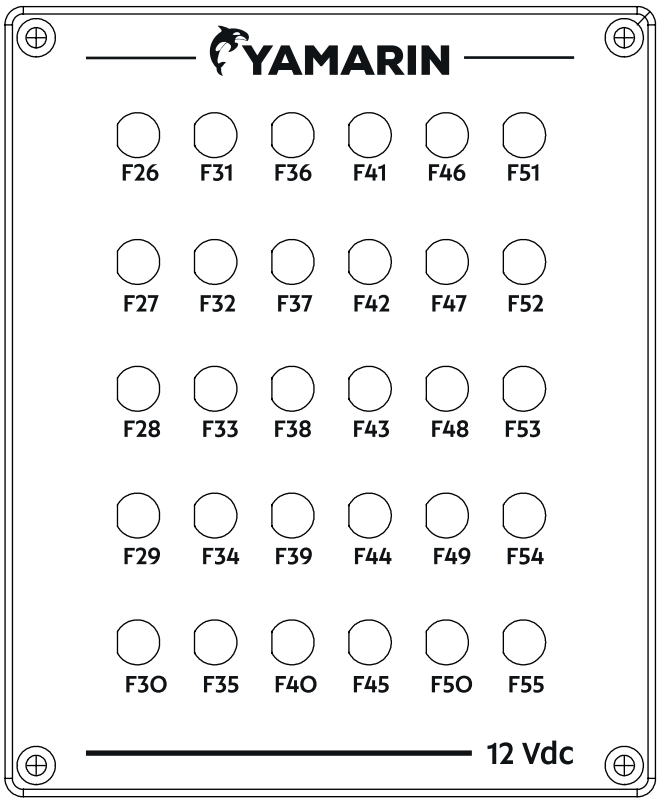

Figure 8.3 Forward fuse panel

Position	Description	Amperage	Position	Description	Amperage
F26	NMEA	3 A	F41	IP camera	3 A
F27	AIS	5 A	F42	Extra	15 A
F28	Fusion radio	15 A	F43	Tank meter	3 A
F29	Fishfinder	1O A	F44	Tank meter	3 A
F3O	12 V outlet	15 A	F45	Tank meter	3 A
F31	USB	15 A	F46	VHF	5 A
F32	Read light	1O A	F47	Toilet fan	1O A
F33	LED control	7 A	F48	Toilet	2O A
F34	Horn	1O A	F49	Toilet light	1O A
F35	Windshield wipers	3O A	F5O	Trim tabs	25 A
F36	AIS/VHF	1O A	F51	Navigation lights	5 A
F37	Search light	5 A	F52	Antenna FM	3 A
F38	Radar	5 A	F53	Network expander	3 A

© 2O26 Inha Works

Position	Description	Amperage	Position	Description	Amperage
F39	Omnisense	3 A	F54	Bilge pump aft	5 A
F4O	Sunroof	2O A	F55	Bilge pump forward	5 A

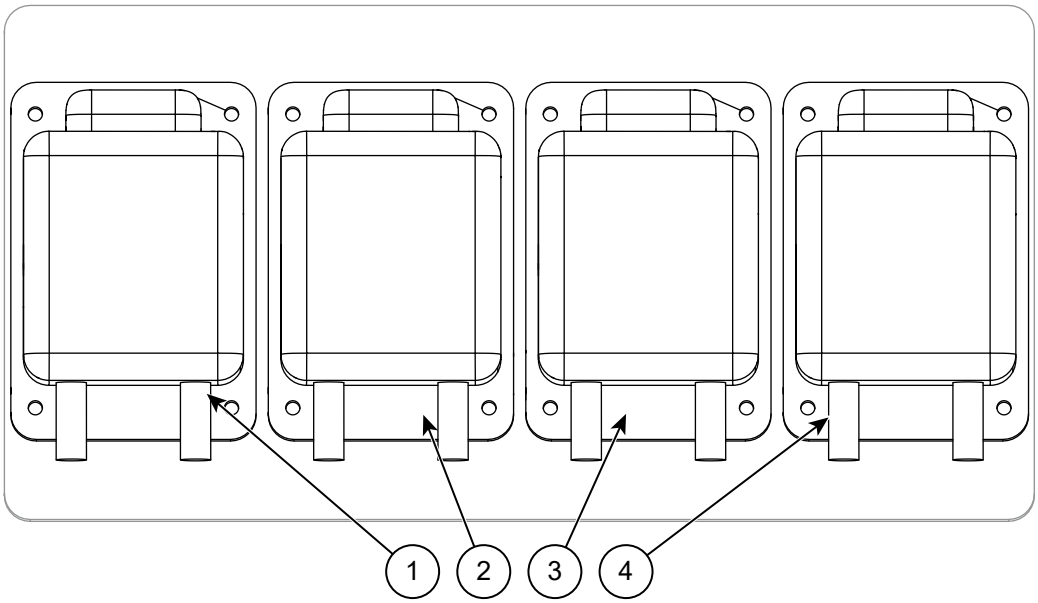

Figure 8.4 Optional remote controlled main switches

1 Port side engine main switch
2 Starboard side engine main switch
3 Service battery 1 main switch
4 Service battery 2 main switch

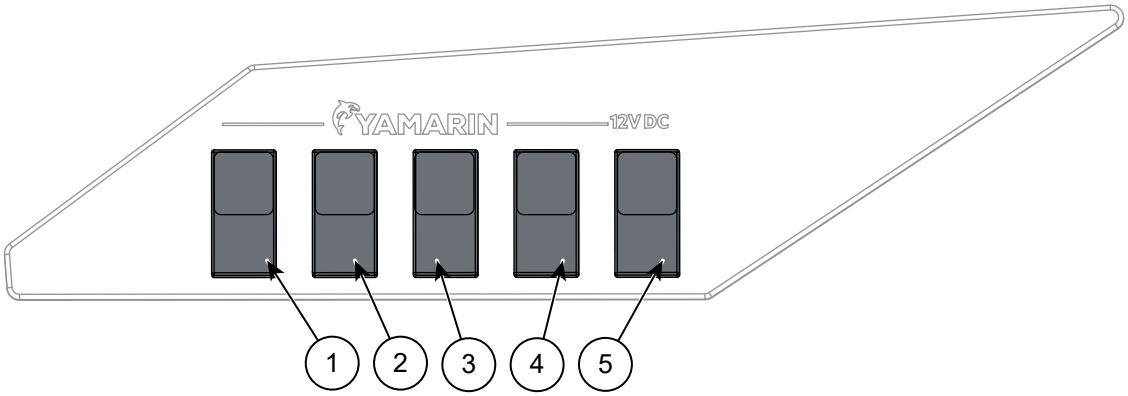

Figure 8.5 Optional remote control switches for main switches

1 Bow thruster main switch
2 Port side engine main switch
3 Starboard side engine main switch
4 Service battery 1 main switch
5 Service battery 2 main switch

© 2O26 Inha Works

8.2.2 Fuse panel locations

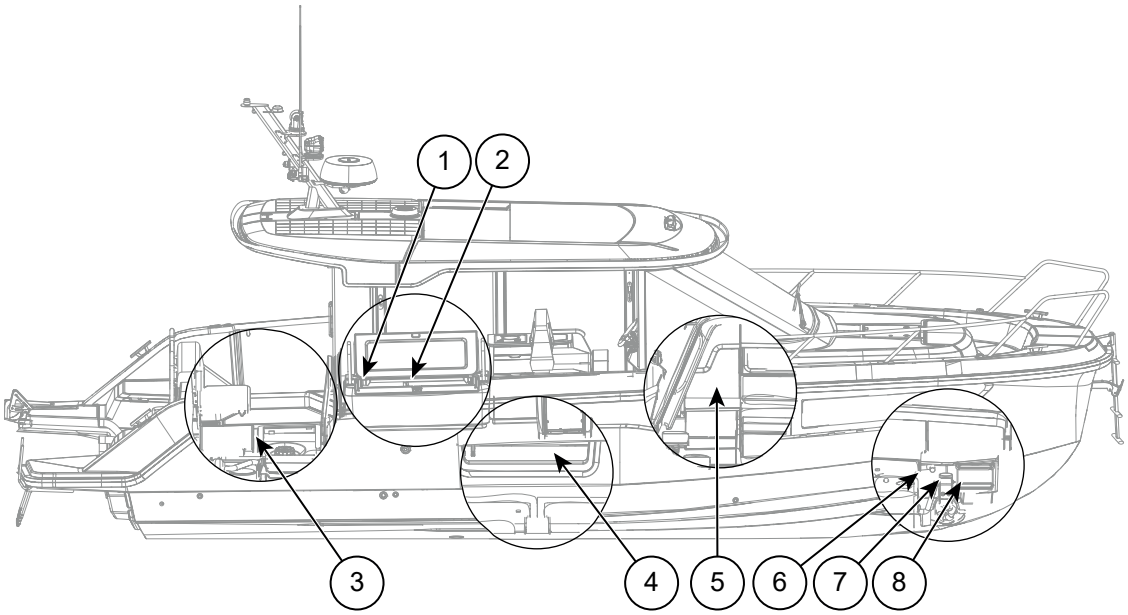

Figure 8.6 Fuse panel locations

1	Remote controlled main switches	5	Forward fuse panel
2	Aft fuse panel and main switches	6	Bow anchor winch main fuse 150 A
3	Aft anchor winch main fuse 150 A	7	Bow thruster main switch
4	Additional fuses in mid cabin technical space	8	Bow thruster fuse 325 A

8.3 Battery system

Your boat has three dedicated battery compartments. One for service batteries, one for engine batteries and one for bow thruster and bow anchor winch battery.

Each battery has a main switch that connects it to the boat's electrical system.

It is recommended to keep all batteries on when the engines are started and the boat is in motion. All batteries charge when the engines are running.

Engine batteries

The batteries are located in the pilot house, under the starboard side seat box. The primary batteries are the engine batteries. In addition to the engines, the engine batteries provide power for the Yamarin Q displays and bilge pumps. The batteries can also be charged with shore power.

The engine batteries must be of the start battery type, capable of supplying the high peak currents required during engine starting.

© 2026 Inha Works

Service batteries

The batteries are located in the pilot house, under the port side seat box. The service batteries are intended for use when the engines are switched off and there is no charging current available. Depending on the equipment level, your boat can be equipped with either two lead acid or AGM deep-cycle batteries, or with one to three lithium batteries. The batteries can also be charged with shore power.

Additional battery for bow thruster and bow anchor winch

The batteries are located in the cabin bow compartment. The battery needs to be suitable for high peak currents. The battery is charged with a DC/DC charger that takes power from the service batteries.

For charging, disconnecting and replacing the batteries, see *8.4 Maintaining batteries on page 58*.

For the battery system wiring diagrams, see the appendices of this manual.

8.3.1 Battery compartment locations

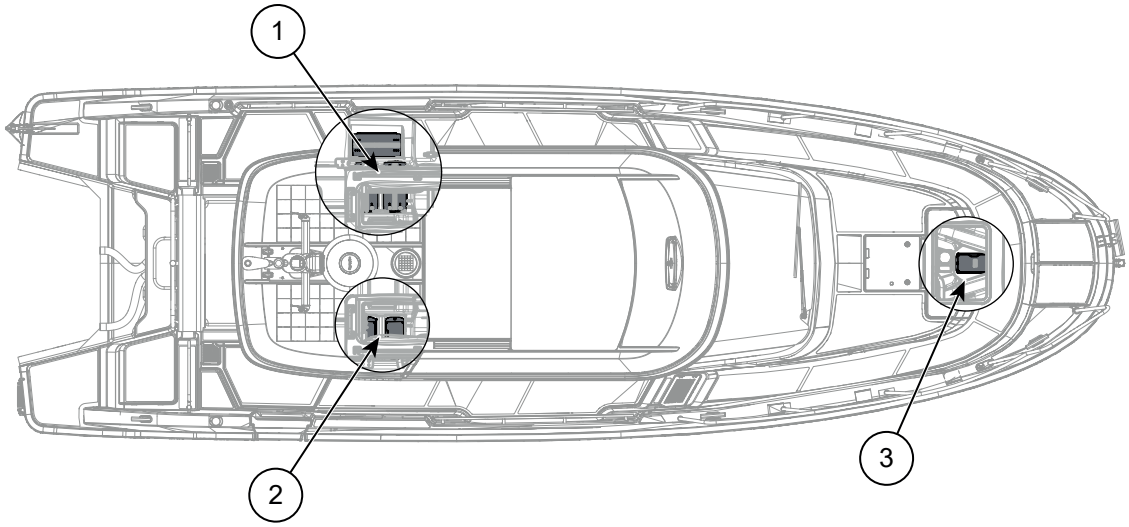

Figure 8.7 Battery compartment locations

1	Service batteries	3	Battery for bow thruster and bow anchor winch
2	Engine batteries		

8.4 Maintaining batteries

Proper battery maintenance is important for a safe use of your boat. Service the batteries regularly and follow their charge status in order to prevent them from discharging. You can follow the batteries' state of charge from the tachometer or Q-monitor, if applicable.

⚠ WARNING Risk of injury.

Incorrect battery handling can cause serious damage to your boat or injury to passengers.

Consult a qualified electrician if necessary.

© 2026 Inha Works

Charging batteries

The boat's batteries charge automatically when the engine is on. You can also recharge batteries externally.

NOTICE Risk of material damage.

Switching off the main switch while the engine is running can damage the charger. Recharging a battery with excessive current may cause the battery to explode.

Never switch off the main switch while the engine is running. Recharge the batteries only using the boat's engine or charger appropriate for the battery type.

Ensure that the battery does not leak and spill battery acid into the boat when recharging.

Disconnecting batteries

NOTICE Risk of material damage.

When connecting or disconnecting batteries, make sure that no metal tools make contact with the aluminium parts of the boat or both terminals of the battery simultaneously.

The batteries need to be disconnected when:

- You want to deactivate the automatic bilge pump.
- In connection with maintenance and winter lay-up.
- When replacing batteries.

Replacing batteries

Requirements for new batteries:

- The engine battery should be capable of producing large currents.
- The service battery, if equipped, should be a deep-cycle battery with high-energy density, such as an AGM, gel, or lithium-ion battery.
- If you are using a special type of battery, take note of any specific requirements in terms of connections, charge regulators, and protection from water.

8.5 Electrical equipment

The configuration of the electrical equipment on your boat may vary. Some of the equipment shown is part of optional accessory packages and might not be part of your boat's configuration.

Inspect the electrical equipment and electrical system at least twice a year.

© 2026 Inha Works

8.5.1 Locations of electrical equipment

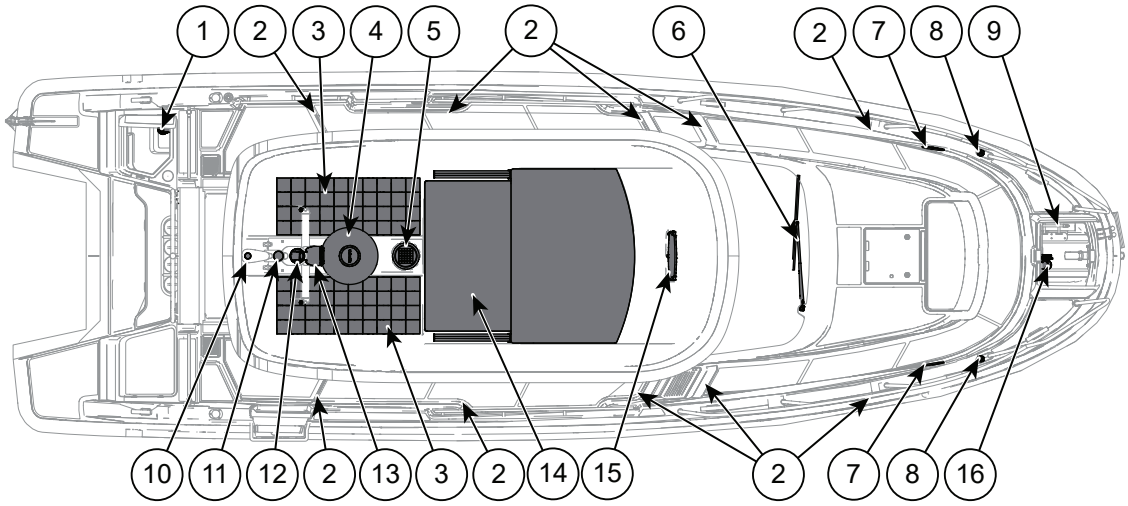

Figure 8.8 Outside electrical equipment seen from top side

1	Anchor winch
2	Deck light
3	Solar panel
4	Radar
5	Solar-powered air vent
6	Windshield wiper
7	Loudspeaker
8	Navigation light
9	Windshield washer pump
10	Anchor light
11	GPS antenna
12	Night vision camera
13	Search light
14	Electric sunroof
15	Bow docking light
16	Bow anchor winch

© 2026 Inha Works

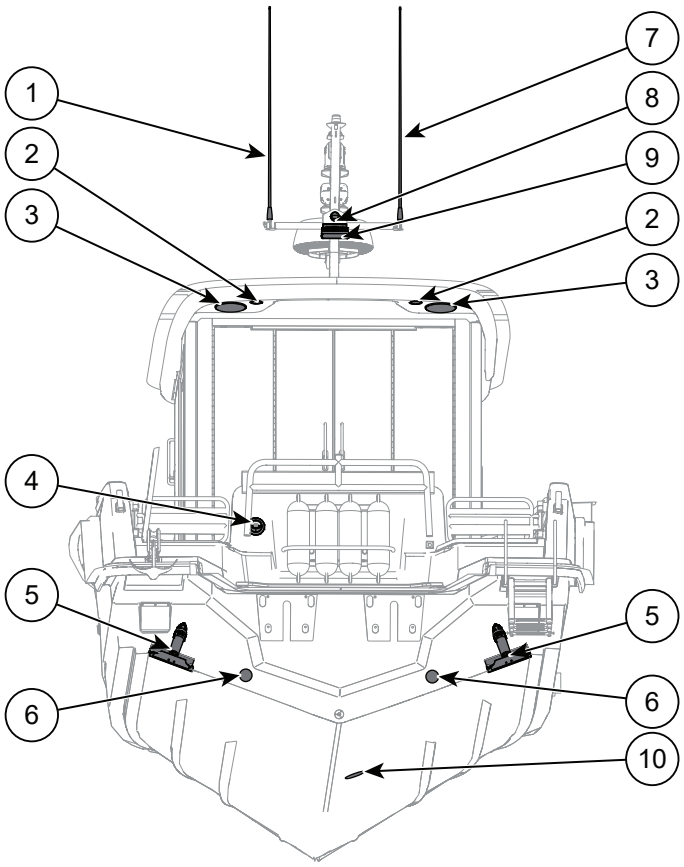

Figure 8.9 Outside electrical equipment seen from aft

1	Radio antenna	6	Underwater lights
2	Spotlight	7	VHF/AIS antenna
3	Loudspeaker	8	Reversing camera
4	Shore power inlet	9	Rear docking light
5	Trim tab	10	Sonar

© 2026 Inha Works

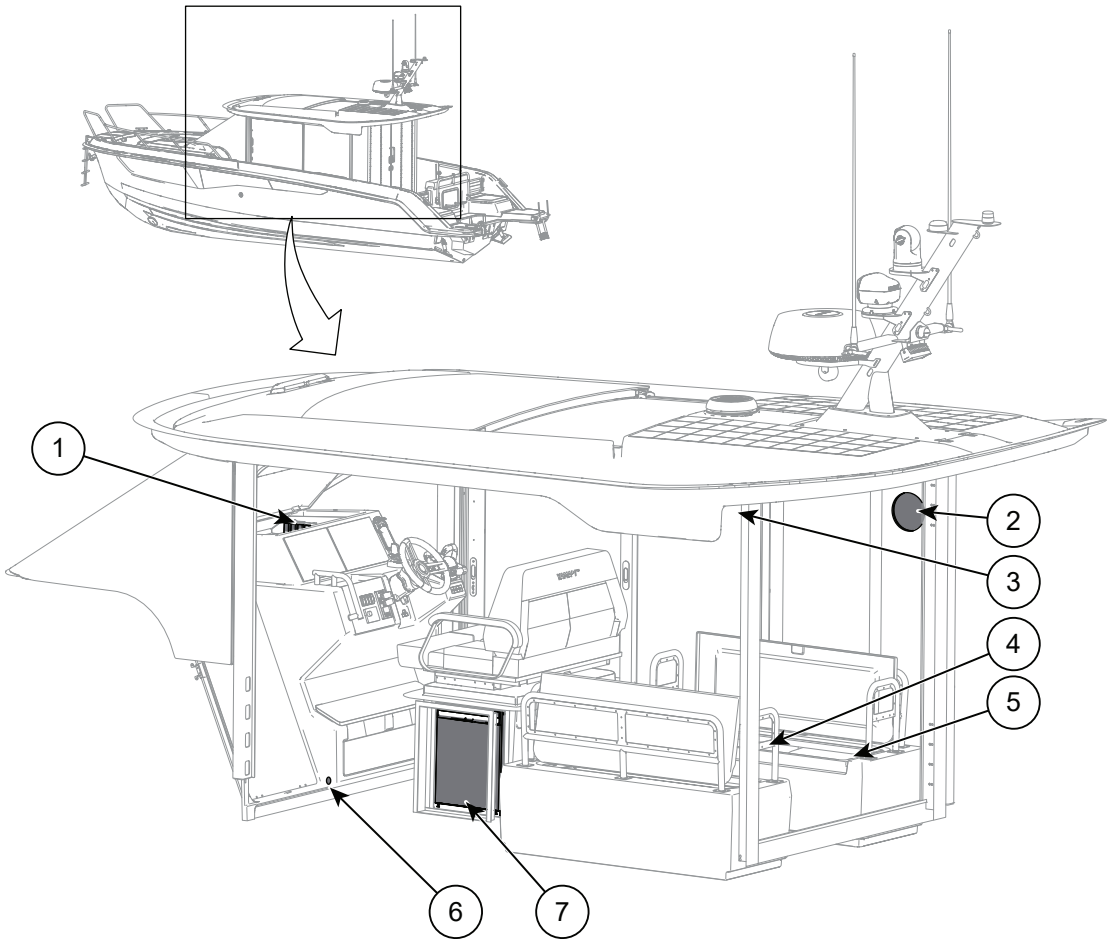

Figure 8.10 Pilot house electrical equipment seen form left side

1	Remote control switches for main switches	5	Engine batteries
2	Loudspeaker	6	Nightlight
3	Spotlight	7	Refrigerator
4	Amplifier and Fusion Black Box		

© 2026 Inha Works

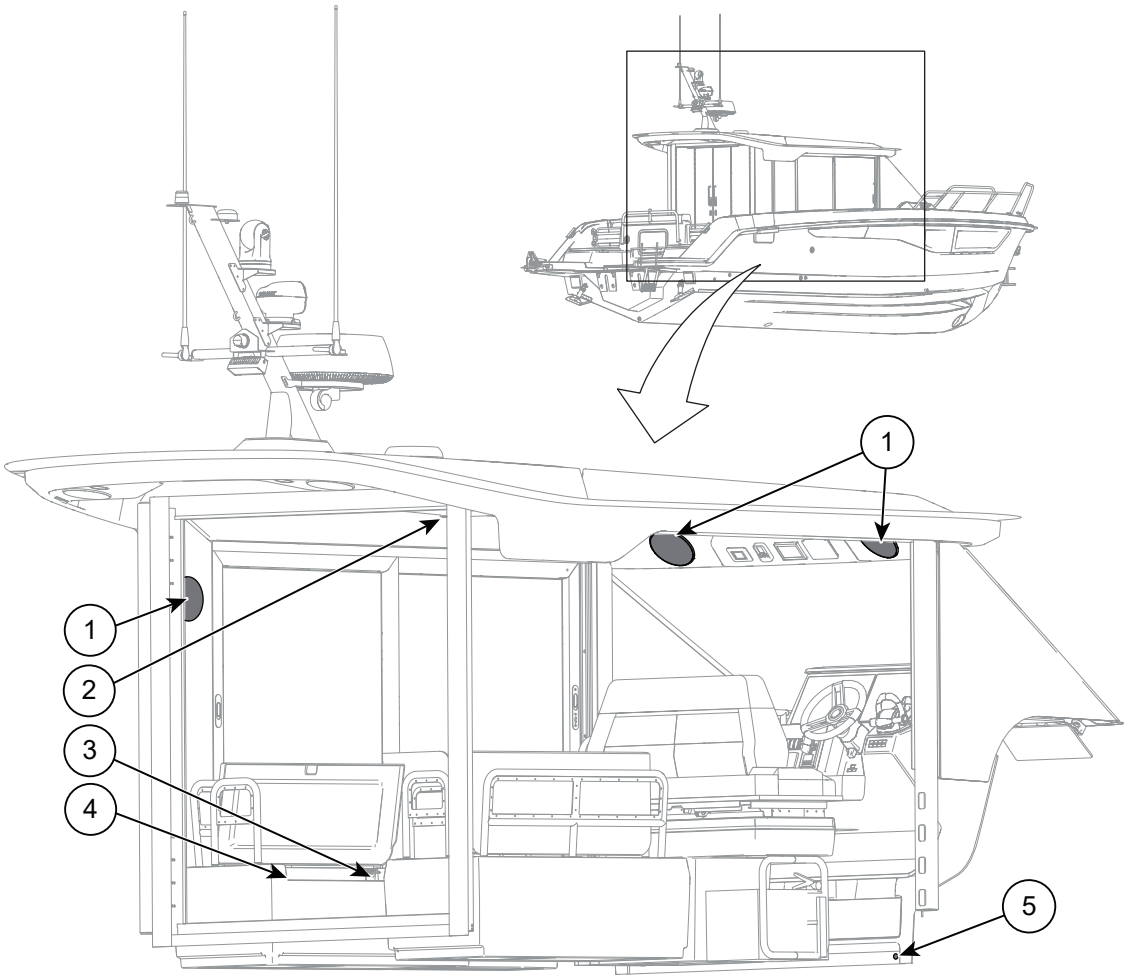

Figure 8.11 Pilot house electrical equipment seen from right side

1	Loudspeaker	4	Main switches
2	Spotlight	5	Nightlight
3	Inverter main switch		

© 2026 Inha Works

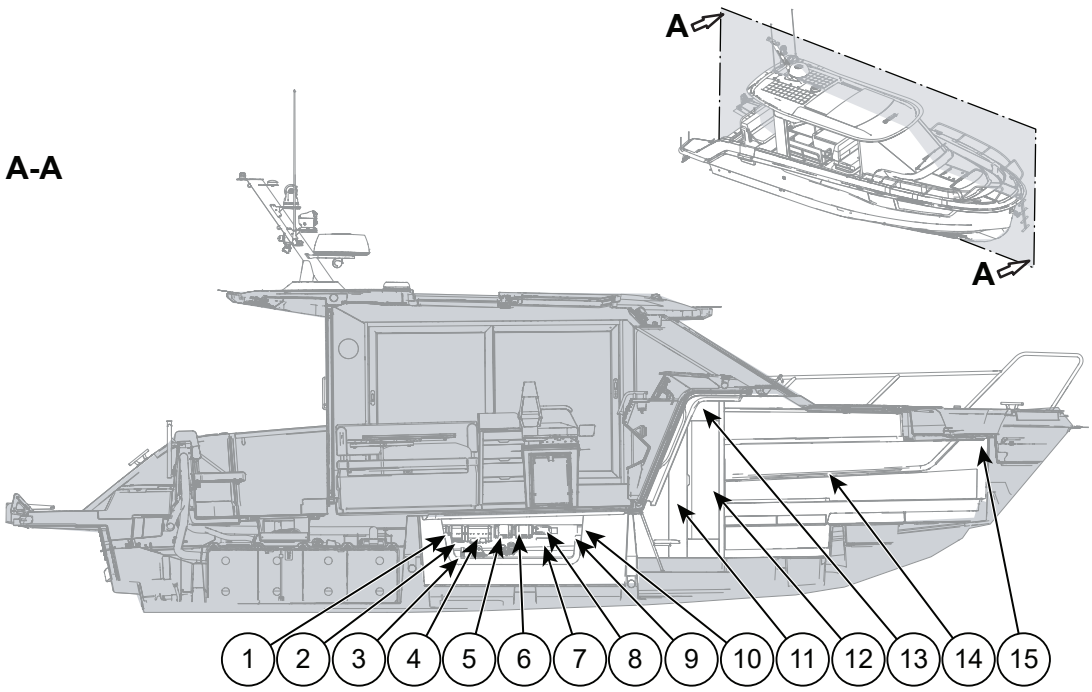

Figure 8.12 Cabin electrical equipment seen from right side (A)

1 Solar panel fuses
2 Battery management system
3 SmartShunt battery monitor
4 Battery distributors
5 Solar panel controllers
6 Bow thruster DC/DC charger
7 Additional fuses
8 System controller for electric system
9 Inverter charger
10 Mid cabin lights
11 Bow fuse panel
12 120/230 V socket
13 Digital switch control switches
14 Cabin lights
15 Spotlight

© 2026 Inha Works

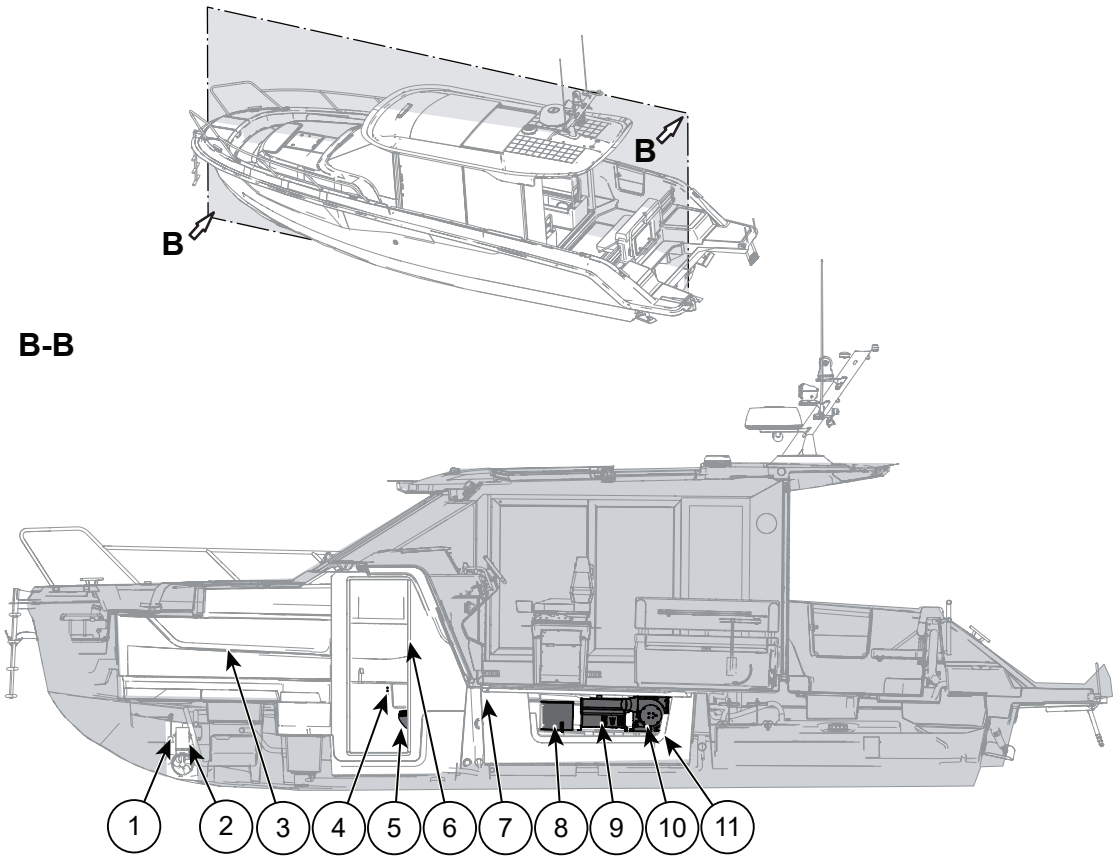

Figure 8.13 Cabin electrical equipment seen from left side (B)

1	Bow anchor fuse and controller	7	Spotlight
2	Bow thruster, bow thruster fuse and additional main switch	8	Water boiler
3	Cabin lights	9	Water and air heater
4	Toilet light switches	10	Air conditioning unit
5	Toilet	11	Mid cabin lights
6	Toilet lights		

8.5.2 Shore power

The boat can be equipped with shore power.

⚠ DANGER Energised AC system

Electric shock may cause death or serious injury.

Disconnect the shore power when it is not in use.

Verify the system is de-energised before performing any work.

© 2026 Inha Works

⚠ WARNING Power cable contact with water

Connecting the shore power cable may energise the water around the boat and cause death or serious injury to nearby swimmers.

Do not allow any part of the power cable to hang in the water.

Note the following when using shore power.

- Connect metallic housings or enclosures of installed electrical appliances to the protective conductor system in the boat.
- Only use double-insulated or grounded (earthed) electrical appliances.
- Do not alter shore power cable connectors. Only compatible cable connectors and shore power receptacles.
- Test the operation of the RCD (Residual Current Device) monthly.

When the shore power is connected, the boat's electrical equipment is mainly powered via shore power. On boats equipped with an inverter, the inverter automatically switches to battery power when the power demand exceeds the incoming shore power capacity.

Boats not equipped with inverter have a dedicated charger for main batteries and service batteries. This allows the batteries to be charged when the shore power is connected. The chargers are located next to the batteries and are accessible via the service hatch at the bottom of the pilot house seat boxes.

8.5.2.1 Locations of shore power equipment

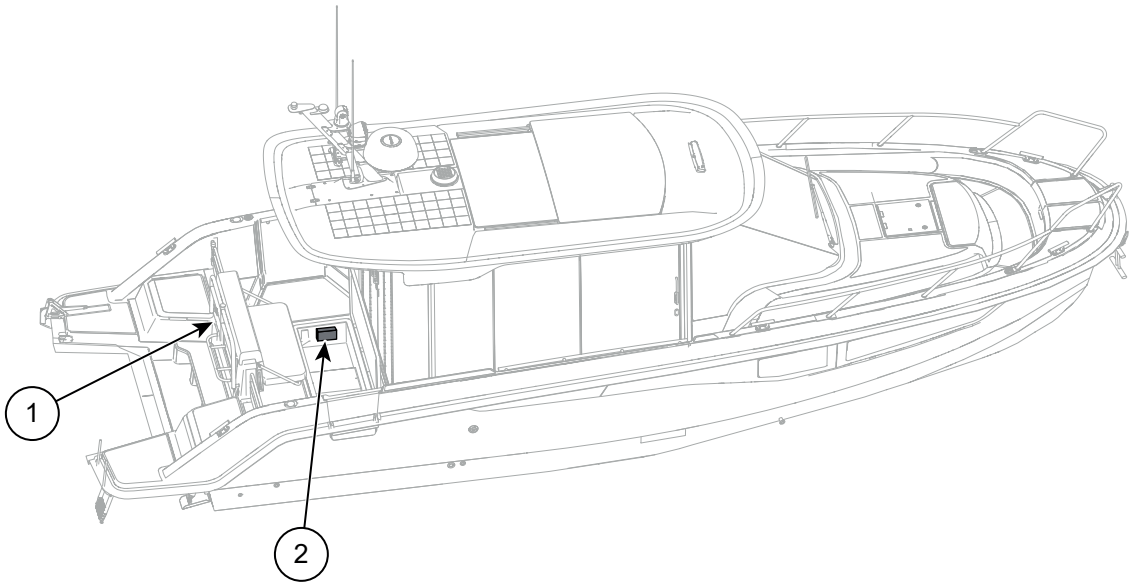

Figure 8.14 Locations of shore power equipment

1 Shore power inlet
2 Shore power fuses and RCD

8.5.2.2 Connecting shore power

Connect the shore power in the correct order to minimise the risk of electric shock and fire.

© 2O26 Inha Works

The shore power system is equipped with an RCD that functions as the system main switch.

1. Connect the shore power cable to the boat's inlet first.
2. Connect power cable to the shore power source.
   If the reverse polarity indicator activates, turn off the RCD switch immediately and correct the polarity fault before activating the boat's electrical system.

To disconnect shore power, unplug the power cable from the shore power source first.

Close the cover of the shore power inlet tightly when the power cable is disconnected.

8.5.3 Inverter

Depending on the equipment level, your boat can be equipped with an inverter charger.

The inverter controls battery charging and supplies 120/230 V AC power to the electrical outlets located around the boat.

The inverter has a three-position power switch located on the bottom of the device (**I**=On, **O**=Off and **II**=charger only).

- When switched to position **I**, the inverter switches automatically the current draw between the service batteries and shore power, when shore power is connected.
- In position **II**, the inverter functions only as a battery charger and the power supply to the electrical outlets is cut when the shore power is disconnected.

The inverter has a dedicated main switch. For the location of the main switch, see *8.2.1 Switch and fuse descriptions on page 53*.

For the location of the inverter, see *8.5.1 Locations of electrical equipment on page 60*.

For more information on the inverter functions and settings, see the equipment manufacturer's manual.

8.5.4 Solar panels

Your boat can be equipped with solar panels. The solar panels provide power for the boat and charge the boat's batteries when shore power is not available.

⚠ WARNING Risk of electric shock.

Failure to isolate the solar panel power supply before working on the electrical system can result in electric shock, burns, serious injury, or damage to electrical equipment.

The solar panels keep the electric system energised even when the boat's main switches are turned off and batteries are disconnected.

Turn off the solar panel power feed by turning off the solar panel fuses before working on the boat's electrical systems.

The solar panel fuses function as the main switch for the solar panel system.

For the location of the solar panel components, see *8.5.1 Locations of electrical equipment on page 60*.

© 2026 Inha Works

8.5.5 Electrically operated seat

Your boat can be equipped with a seat that has electric slide control.

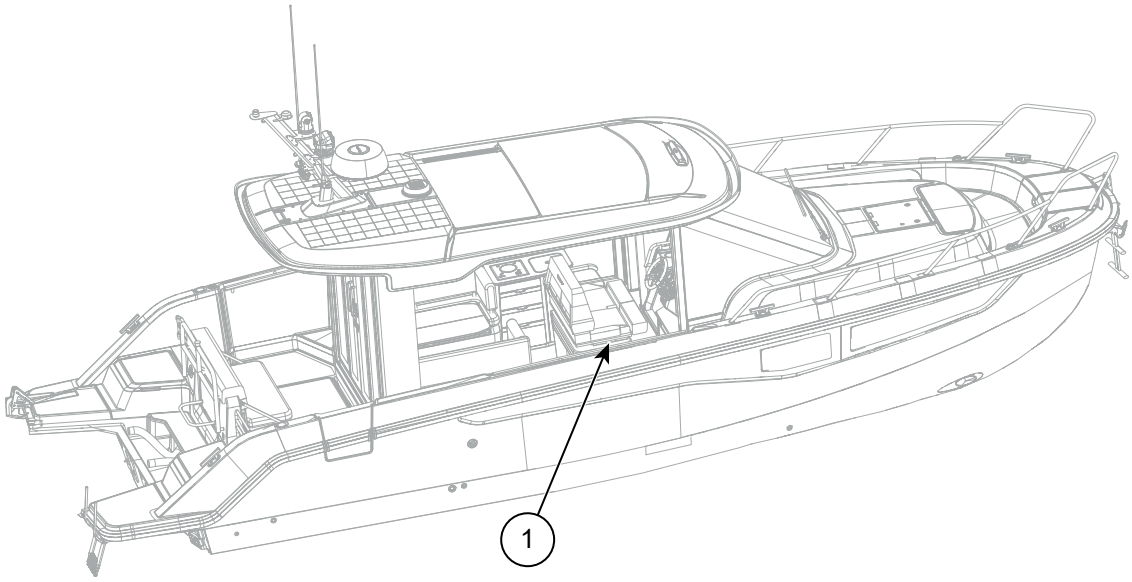

Figure 8.15 Location of the electrically operated seat controls

1 Electrically operated seat controls

Use the controls on the side of the seat to slide the seat forward or backward.

8.5.6 Cabin, pilot house and deck lights

Cabin, pilot house and deck lights are controlled via the digital switch. Yamarin Q has a dedicated app for controlling the digital switch. Alternatively, you can control the lights, and certain other functions, using the manually operated switches in the cabin.

© 2026 Inha Works

8.5.6.1 Manual switches for digital switch

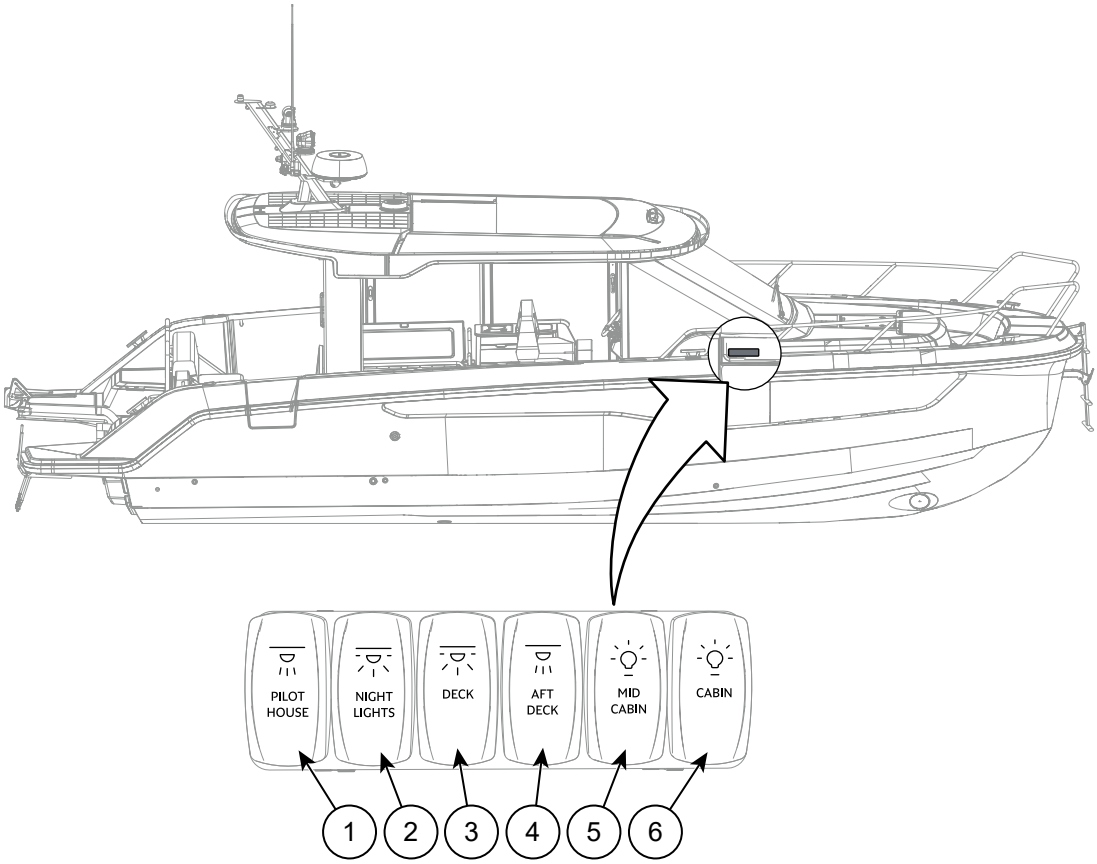

Figure 8.16 Manual switches for digital switch in the cabin

1	Pilot house spotlights	4	Aft deck spotlights
2	Nightlights	5	Mid cabin lights
3	Deck lights	6	Cabin lights

© 2026 Inha Works

8.5.6.2 Toilet light switches

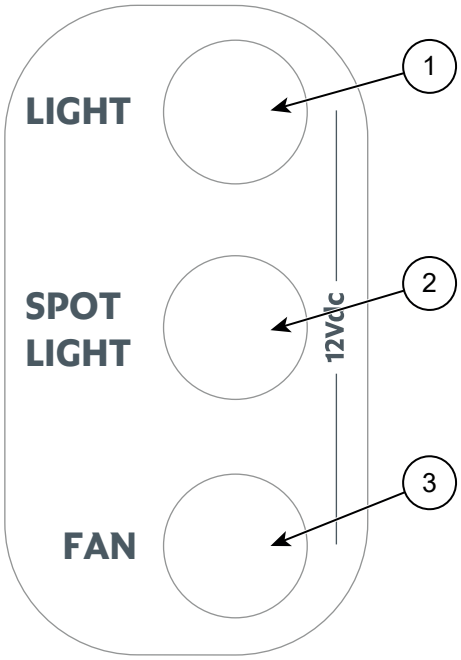

Figure 8.17 Toilet light switches

1	Light strip	3	Toilet fan
2	Spotlights		

8.5.7 Navigation lights

Your boat is equipped with the following navigation lights:

- Fixed navigation lights in the bow.
- White anchor light on a removable light mast in the stern.

For the location of the lights, see *Locations of electrical equipment*.

NOTICE Risk of material damage.

If the boat is equipped with a telescopic light mast, store it in the retracted position to avoid bending it.

The rules and regulations on the use of lights when boating can differ locally. Check your local regulations before leaving the port. As a rule of thumb, it is better that you have the lights on than off.

Always check that the lights are functioning before you leave the port. Replace defective lights as soon as possible.

If you install additional lights on the boat, make sure that they do not interfere with the visibility of the standard-regulated anchor and navigation lights. Do not modify the anchor or navigation lights in any way.

© 2026 Inha Works

9 Bilge pumps and draining

The bilge pump removes excess water that accumulates in the bilge during the boat operation.

Depending on the model and equipment level, your boat can be equipped with automatic electric and/or manual bilge pump(s).

⚠ WARNING Risk of flooding

The bilge pump system is not designed to control water ingress caused by running aground or other structural damage.

Make sure that at least one bucket or bailer is kept on board. It must be attached to the boat with a rope to prevent loss.

Some smaller boats that are designed to be emptied using a removable pump or a bailer may not have a bilge pump installed as a standard equipment. If you wish to install a bilge pump on a boat that is not equipped with one, contact an authorised service.

Regularly inspect the bilge pumps and clean their suction heads of any waste. You can access the pump through the bilge pump service hatch.

To ensure stability it is important that the amount of water in the bilge is kept to a minimum. It is, however, natural that the bilge always contains a small quantity of water that the bilge pumps cannot remove.

9.1 Electric pump

The automatic bilge pump drains water from the bilge when the surface sensor detects water:

- The pump activates when the sensor has been fully submerged for 10 seconds.
- It deactivates when the sensor has been dry for more than two seconds.
- The pump is always on standby when the battery is connected, regardless of the position of the main switch.

NOTICE If the bilge pump is running constantly it could indicate a leak in the hull.

Do not disconnect the bilge pump when the boat is in the water.

You can also activate the automatic pump manually:

- The switch is located in the steering console.
- This switch is equipped with a light that turns on when the pump is operating.
- If the light does not activate, check the fuse of the bilge pump.
- If the fuse is intact and the pump still does not start, consult an authorized dealer for repairs.

© 2026 Inha Works

9.2 Locations of draining equipment

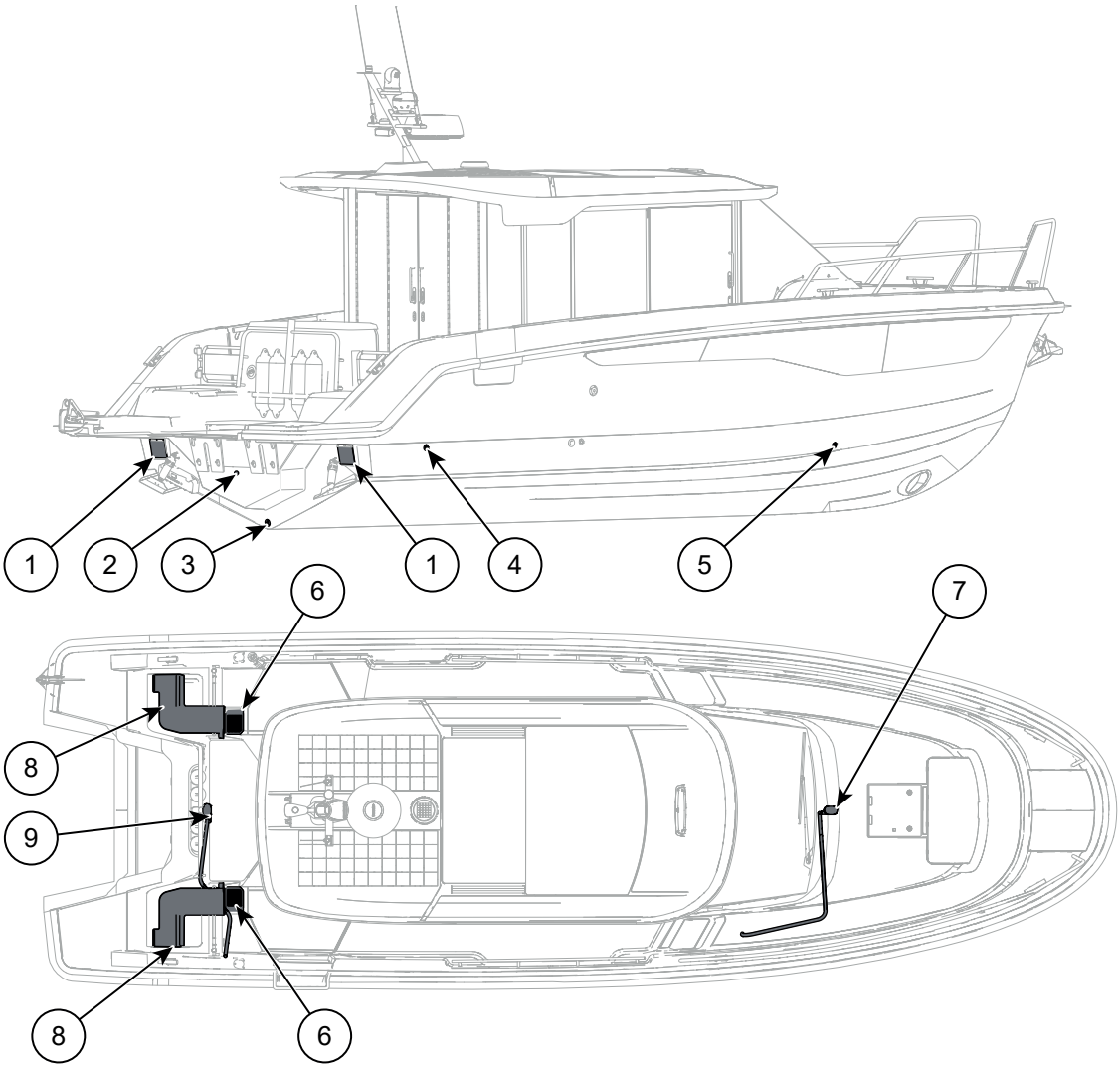

Figure 9.1 Bilge pumps and draining

1 Rainwater drainage shut-off flap
2 Engine well drainage
3 Rear plug
4 Aft bilge pump through fitting
5 Forward bilge pump through fitting
6 Rainwater drainage
7 Forward electric bilge pump and float switch
8 Rainwater drainage gutter
9 Aft electric bilge pump and float switch

© 2026 Inha Works

10 Freshwater system

The freshwater system consists of the following components.

- Fixed freshwater tank
- Water pump
- Water heater (Available optionally for some boat models)
- One or several water outlets depending on the boat's equipment level.

  The outlets can include a deck shower, pantry tap and toilet tap.

NOTICE Risk of material damage.

Leftover water in the system may freeze during winter lay-up and cause damage to the system.

Always empty the freshwater system if you leave the boat unused for longer periods of time. Use pressurized air to empty the hoses completely if necessary.

Disinfect the freshwater system annually. Consult your local boat dealer on suitable chemicals for disinfecting plastic fresh water tanks and follow the instructions given.

The inlet of the freshwater system is indicated with blue colour and with the text **WATER**. The capacity of the water tank is specified in *3.3 Technical specifications*.

Check the inlet's O-ring seal for wear every time you fill the water tank. Change the seal if necessary.

The freshwater system is a closed system, and heat can cause a biofilm to appear on the inner surface of the tank and the hoses.

- Clean the system if the water tastes or smells bad, or if it is dirty.
- Also clean the system thoroughly if algae or slime is found on the inner surfaces of the tank or hoses.

© 2026 Inha Works

10.1 Freshwater system components

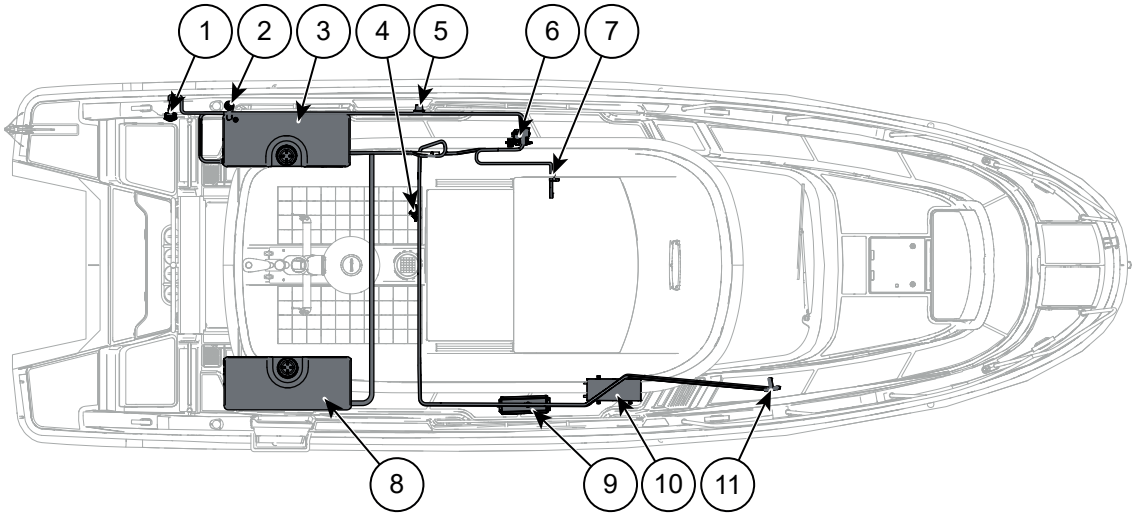

Figure 10.1 Freshwater system

1 Deck shower
2 Water inlet
3 Freshwater tank
4 Water pump
5 Deck wash hose adapter
6 Water pump for deck wash
7 Pantry tap
8 Optional second water tank
9 Water heater
10 Hot water boiler
11 Toilet tap

© 2026 Inha Works

11 Toilet and septic tanks

The boat is equipped with a collection system for onboard waste waters. It includes a toilet, separate holding tanks for gray water and black water (septic), and the necessary equipment for emptying the tanks.

NOTICE Enviromental hazard.

Discharging the holding tanks into the sea is harmful to marine life and against responsible seamanship in many countries.

Plan your trip so that you have access to the septic services at ports.

Find out local regulations about the handling of marine waste water before emptying the tanks into the sea.

NOTICE Risk of material damage.

Leftover water in the system may freeze during winter lay-up and cause damage to the system.

Keep the septic system as empty as possible when storing the boat in freezing conditions. If necessary, use glycol as anti-freeze agent.

- The holding tanks have surface level indicators. You can monitor the levels from the Yamarin Q screen at the helm station.
- Clean the holding tanks, hoses and other components with a mild alkaline detergent.

For more information on the system and component locations, see subsections *Blackwater system* and *Greywater system*.

11.1 Blackwater system

The blackwater system collects sewage from the toilet and transfers it to a separate holding tank. Depending on the boat's configuration, the toilet flushes using either sea water or fresh water.

- Drain the blackwater tank when leaving port by using the port's drainage equipment. The drain fitting on the deck is indicated with the text **BLACK WATER**.
- You can also drain the tank into the sea by using the sea drainage valve. Keep the valve closed under normal conditions. The valve can be sealed.
- It is recommended to keep the toilet's seawater flushing intake valve closed when the toilet is not in use.

© 2026 Inha Works

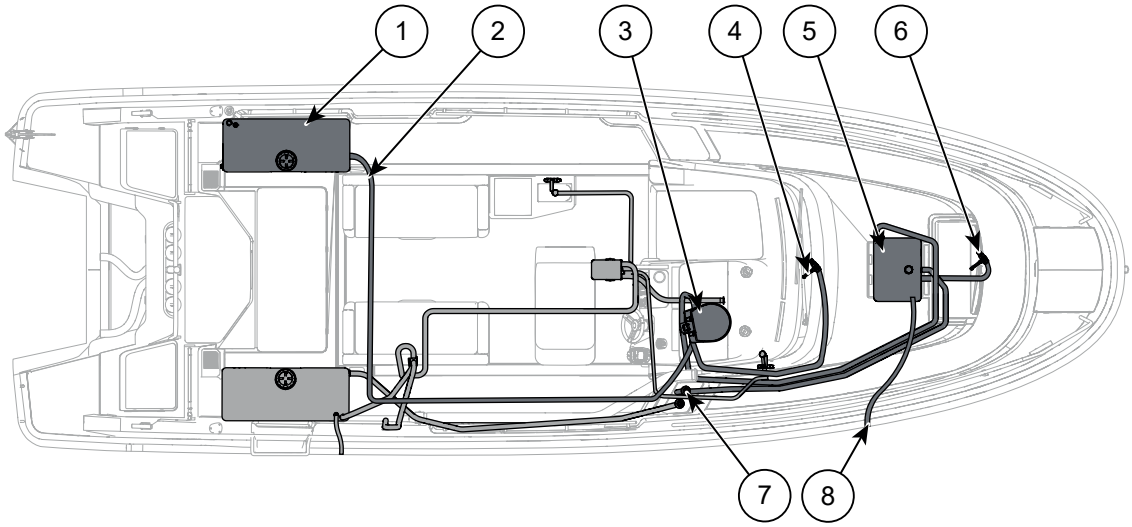

Figure 11.1 Blackwater system components

1	Freshwater tank	5	Blackwater tank
2	Toilet flushing water line*	6	Blackwater tank sea drainage valve
3	Toilet	7	Blackwater tank vacuum drain fitting
4	Toilet flushing water intake valve**	8	Blackwater tank breather through fitting

* Available only when the boat is equipped with a fresh water flushing toilet.

** Available only when the boat is equipped with a sea water flushing toilet.

11.2 Greywater system

The greywater system collects waste water from the boat's sinks and toilet floor drain.

The system is equipped with a 3-way valve that directs gray water either to the greywater tank or to the sea drainage through the hull.

- The position of the longer end of the valve handle indicates which outlet is closed.
- The 3-way valve is located under a hatch inside the driver's side back seat in the pilot house.
- You can drain the graywater tank through the graywater tank vacuum drain fitting. The fitting is indicated with the text **GRAY WATER**.

© 2026 Inha Works

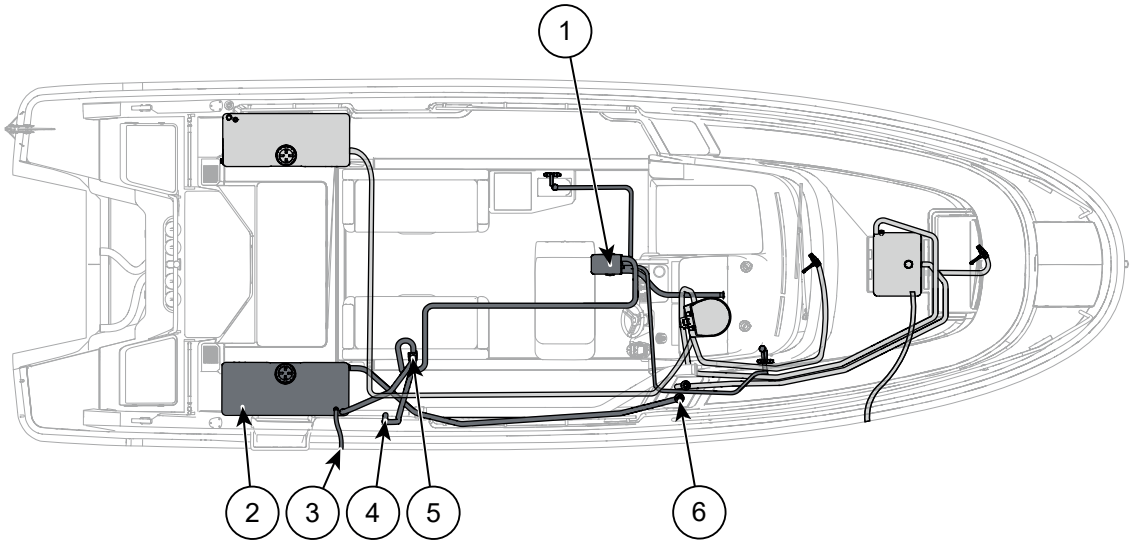

Figure 11.2 Greywater system components

1 Greywater collection pump
2 Greywater tank
3 Greywater tank breather through fitting
4 Greywater tank sea drainage through fitting
5 Greywater 3-way valve
6 Greywater tank vacuum drain fitting

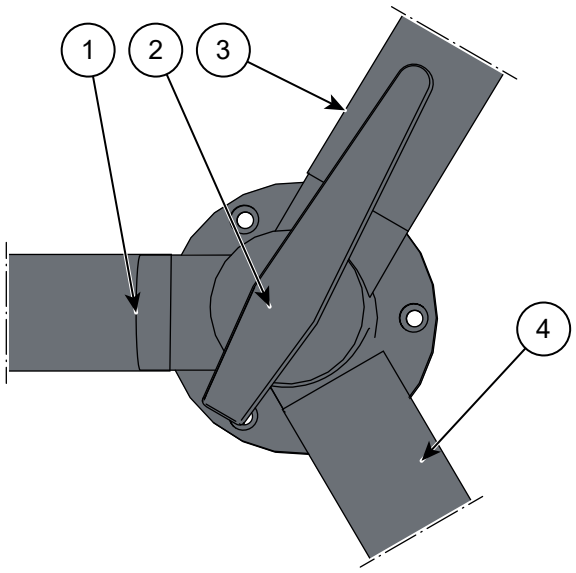

Figure 11.3 Greywater 3-way valve

1 Outlet to sea drainage
2 Selector handle
3 Outlet to greywater tank
4 Inlet

© 2026 Inha Works

12 Accessories

12.1 Anchor winch

The boat can be equipped with an electrically operated anchor winch, which is located on the aft deck of the boat.

- The anchor winch deploys and retrieves the anchor using a rope or a chain.
- It is controlled from a control panel or with a separate remote controller depending on the equipment level of the boat.
- The winch is equipped with a safety line for securing the anchor when it is not in use.

12.1.1 Anchor winch system components

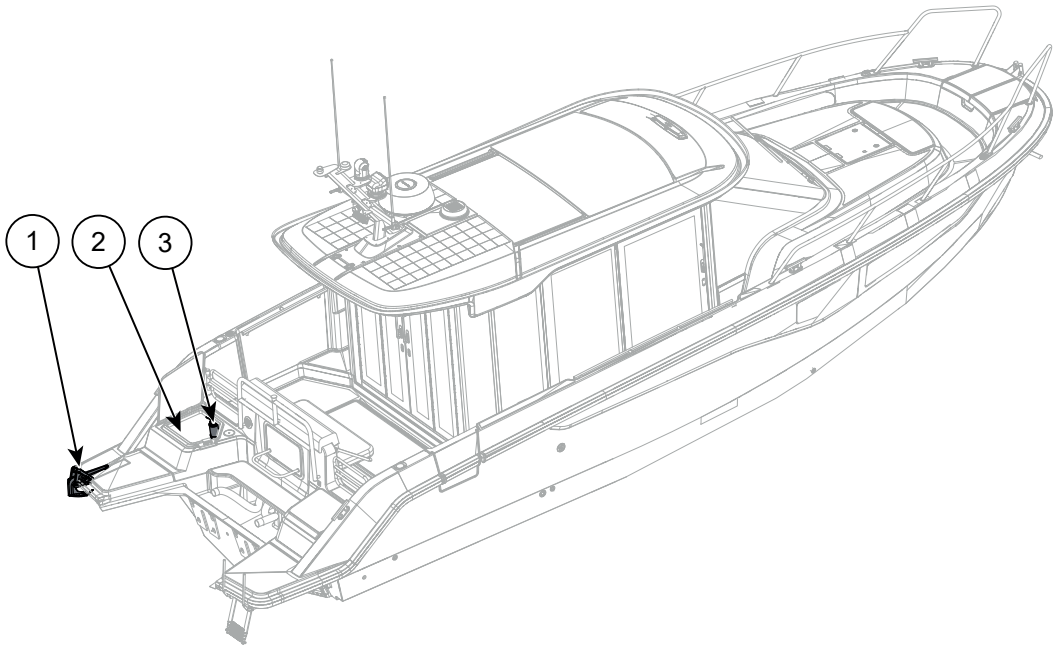

Figure 12.1 Anchor winch

1	Anchor and anchor guide	3	Winch
2	Anchor winch control panel		

12.1.2 Using the anchor winch

To deploy the anchor, release it using the control panel or, if applicable, the remote control.

To retrieve the anchor:

- Reel up the anchor from the control panel or the remote control.
- Secure the anchor to the boat using the safety line. Adjust the safety line length so that it is tight enough to keep the anchor from moving but is still easy to remove when needed.

© 2026 Inha Works

⚠ WARNING Dropping the anchor while the boat is moving can cause death or serious injury. To avoid the anchor falling unintentionally:

- Always secure the anchor with the safety line when the boat is moving or the anchor is not in use.
- Never attach the safety line to the winch. Attach it to a fixed point on the boat.

The anchor guide top roller should sit firmly on top of the anchor. Regularly check the roller position and adjust if necessary by tightening the anchor guide top roller with the adjustment screw:

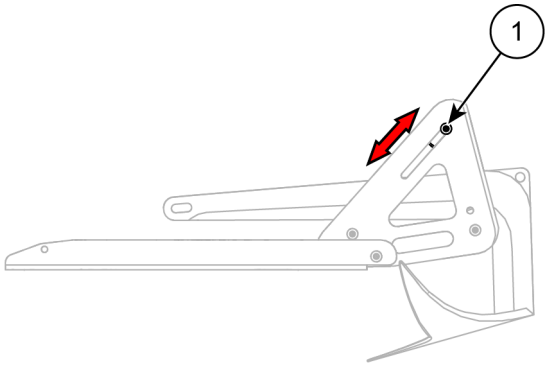

1 Anchor guide top roller

NOTICE Do not overtighten the guide roller. This can break the roller or prevent the winch from functioning properly.

- When the anchor is reeled up, make sure the winch rope or chain is tight, but does not cause excessive force to the winch or anchor guide.
- If the anchor does not fully reel up or reels up too tight, adjust the end-stop sensor rings on the anchor rope or chain.

Salt water can cause the anchor rope to stiffen up. Rinse the rope regularly with fresh water to keep the winch functioning properly.

See the provided anchor winch manual for more detailed instructions on how to operate the winch.

12.1.3 Bow anchor winch

The boat can be equipped with a bow anchor winch. The winch is operated and maintained the same way as the aft anchor. See *12.1 Anchor winch on page 78*.

The bow anchor winch is powered by an additional battery located in the service hatch in the cabin. See *8.3.1 Battery compartment locations on page 58*.

The bow anchor guide has an additional securing mechanism to keep the anchor from moving while not in use. Secure the anchor in place with the securing plate and thumbscrews that are integrated into the anchor guide.

© 2026 Inha Works

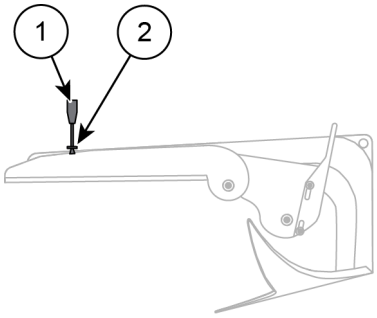

1 Thumbscrew
2 Securing plate

12.2 Air conditioning

The air conditioning is an optional feature, and its operation is described in a separate manufacturer's manual. Air conditioning excludes the heater from the possible optional features for the boat.

The system is powered through the shore power or through the inverter if the boat is equipped with the optional lithium batteries. The inverter has an automated circuit switcher that switches between the shore power and batteries when needed.

Without the lithium battery package, the air conditioning is only operational when shore power is connected.

The air conditioning unit uses sea water for cooling. The cool air is distributed throughout the boat through dedicated vents in the pilot house, cabin, mid cabin and on to the windshield.

For the location of the air conditioning control panel, see *5.1.1 Control device locations on page 32*.

When winterizing your boat, perform the following preparations for the air conditioning system.

1. After lifting the boat out of the water, flush the system's sea water circuit with fresh water to remove any salt residues.

   Flush the water circuit once more before launching the boat after winter storage.
2. When the boat is back in the water, start the air conditioning unit.

   Inspect the sea water circuit for any leaks and check that all hose clamps are secure.
3. Inspect the condensate drain connections and ensure that they are secure.
4. Check all mechanical and electrical components for signs of oxidation or corrosion.

   Treat any oxidized or corroded areas with appropriate care products.

© 2026 Inha Works

12.2.1 Air conditioning system components

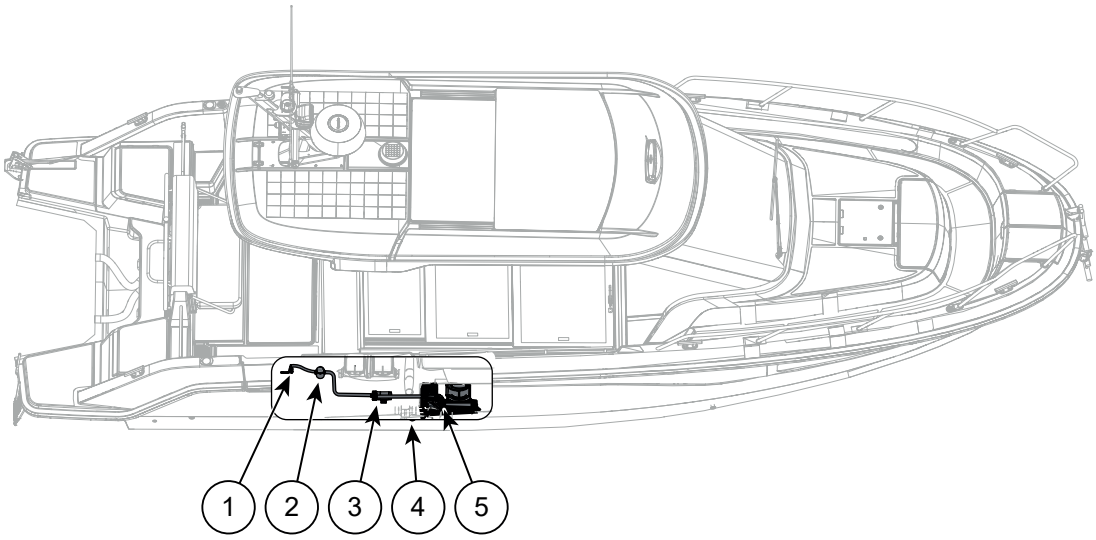

Figure 12.2 Air conditioning system

1	Cooling water inlet through hull and shut off valve	4	Cooling water outlet through hull
2	Cooling water strainer	5	Air conditioning unit
3	Water pump		

12.3 Bow thruster

Depending on your boat's optional accessories, it may be equipped with a bow thruster.

- The bow thruster assists you in manoeuvring the boat at slow speeds. It enables you to move the bow sideways without using the main engine.
- The thruster is operated from a control panel or joystick. For the location of controls, see *5.1 Helm station controls on page 31*.

NOTICE

Equipment damage hazard.

Using the bow thruster continuously for long periods of time can blow the thruster fuses and/or damage its motor.

Use the thruster in short bursts to turn the bow in the desired direction.

For more information on the bow thruster, see a separate equipment manufacturer's manual.

12.4 Aft enclosure

The boat can be equipped with an aft enclosure. The enclosure provides cover for the aft deck and extends the space of the pilot house. The aft enclosure is designed to withstand a maximum speed of 30 knots at sea, and 50 km/h in road transport.

Fasten all press studs properly when using the enclosure.

© 2026 Inha Works

The seal between the aft enclosure and the pilot house is not necessarily watertight.

12.4.1 Raised aft enclosure

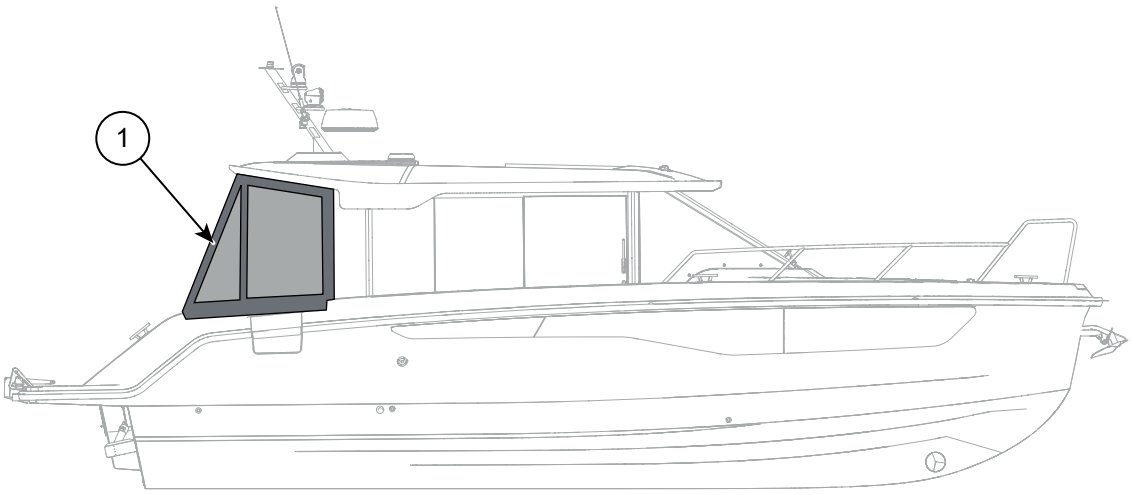

Figure 12.3 Aft enclosure

1 Aft enclosure

12.5 Aft awning

The boat can be equipped with an aft awning that covers the aft deck area.

NOTICE

Risk of material damage.

Using the aft awning during strong wind or gusts can cause it to break.

Use the aft awning only when the boat is at standstill and in low wind conditions.

Erect the two corner posts by placing them in their respective holders. Suspend the canvas between the posts and attachment loops on the pilot house roof. The tension from the posts keeps the canvas tight.

© 2026 Inha Works

12.5.1 Raised aft awning

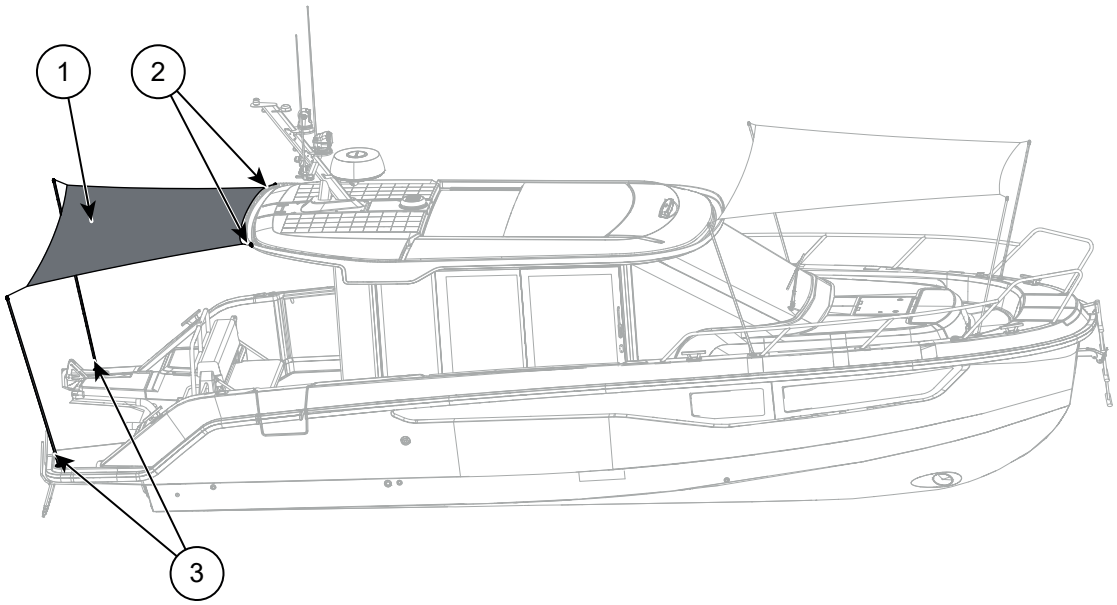

Figure 12.4 Aft awning

1	Aft awning canvas	3	Aft awning posts and post holders
2	D-rings		

12.6 Sunshade

The boat can be equipped with a sunshade that covers the bow sunbed area.

NOTICE Risk of material damage.

Using the sunshade during strong wind or gusts can cause it to break.

Use the sunshade only when the boat is at standstill and in low wind conditions.

Erect the four corner posts by placing them in their respective holders. Suspend the canvas between the posts. The tension from the posts keeps the canvas tight.

© 2026 Inha Works

12.6.1 Raised sunshade

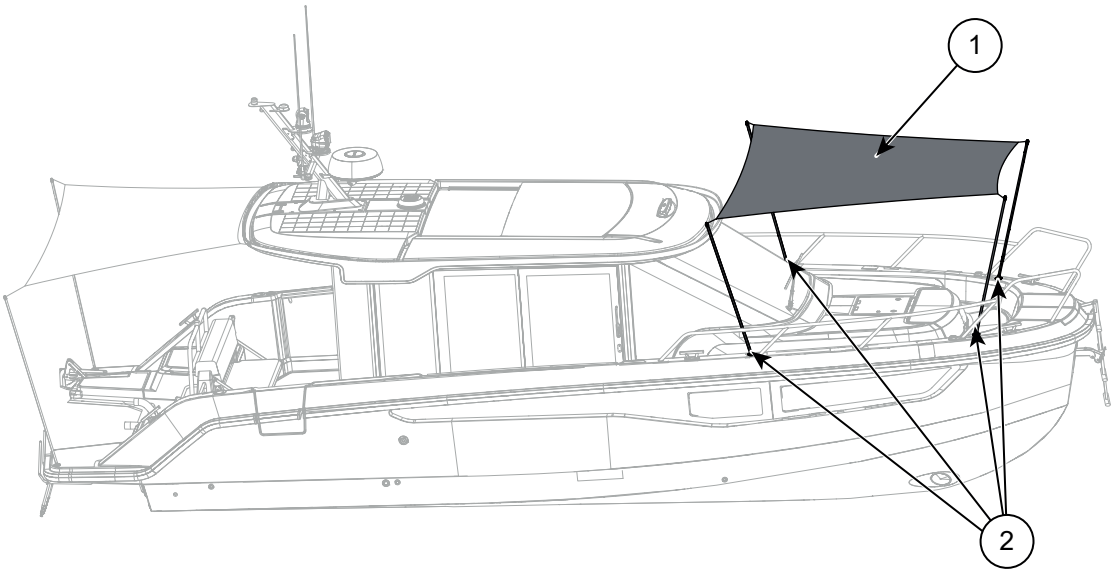

Figure 12.5 Raised sunshade

1 Sunshade canvas
2 Sunshade posts and post holders

© 2026 Inha Works

13 Environmental considerations

The seas, lakes and archipelago are unique and it is a matter of honour for boaters to preserve their natural habitats. Avoid the following:

- Fuel and oil leaks.
- Discharge of waste or rubbish into the water or onto the shore.
- Discharge of detergents or solvents into the water.
- Emptying the septic tank into the sea.
- Causing loud noise, whether out on the water or in harbour.
- Causing wake wash, especially on narrow straits and shallow waters.

Always adhere to the applicable environmental laws and regulations. Familiarise yourself with the provisions of the International Convention for the Prevention of Pollution from Ships(MARPOL).

© 2026 Inha Works

14 Maintenance, repairs and docking

Information on boat maintenance, winter storage, servicing, and repairs is available on the website at www.yamarin.com or from your local dealer.

Consult an authorized dealer for information on repairing large aluminium areas or treating damaged surfaces. In the event of engine failure or problems with other equipment, the primary point of contact is the manufacturer of the equipment in question.

⚠ WARNING Only a qualified electrician is allowed to repair the electric system.

NOTICE If performed incorrectly, retrofits or alterations may cause damage to the boat's structures, expose it to galvanization or spontaneous corrosion, or endanger safety.

- Only use cleaning agents, surface treatments, and paints that are compatible with the materials of your boat.
- Consult an authorized dealer before you make any new electrical connections, hatches, holes, install any equipment, or combine any other metals or alloys with aluminum.

14.1 Maintenance tasks

14.1.1 Before winter lay-up

It is important that you perform the following actions before winter storage:

- Wash the hull and bottom immediately after lifting the boat out of the water.
- Unscrew the rear plug and make sure all other drainage devices are open.
- Make sure there is no water left in the bilge or inside the bilge pumps to avoid freezing. Run the pumps to empty them if necessary, but do not let the automatic pump overheat.
- Remove all cushions and store them indoors in a dry place. Make sure to leave the cabin well ventilated.
- Wash the rear and front decks.
- Remove the batteries and store them in a warm, dry place.
- If the boat is equipped with a refrigerator, winterize it according to the equipment manufacturer's manual.
- Also see the available manufacturer's manuals for other equipment to determine if they require specific preparations before winter storage.

14.1.2 Before launching

Perform these actions before launching the boat:

© 2026 Inha Works

- If you have stored the boat under a tarpaulin, remove it in good time before launching.
- Wash the hull and bottom with a suitable detergent and a soft brush.
- Paint the bottom with antifouling paint if the boat is to be used in salt water.
- Put the batteries back and check the electrolyte levels in the cells. Check the condition and charge levels of the batteries.
- Check all cables, clamps, engine mountings and other fastenings.
- Check the steering and instrumentation before launching.
- Make sure that all drainage devices are tight and in order. Check that there is no frost damage.
- Check the condition of anodes and replace them if necessary.

14.2 Care instructions

14.2.1 Washing and waxing the boat

Keeping your boat clean will help prevent dirt from staining the surfaces, make it easier to maintain your boat and reduce the overall amount of maintenance required.

- For normal cleaning, fresh water and a soft brush or sponge are usually sufficient. Use special boat care products or mild general purpose cleaning agents if needed.
- Rinse off any bird droppings from the boat's surfaces and canopy as soon as possible. Brush off dried bird droppings and clean them using fresh water and a mild detergent if needed.
- Wash the exterior hull immediately after lifting the boat out of the water, as it is easiest to remove any algae and dirt when the hull is still wet. Use a pressure washer or brush with fresh water.
- If the hull has been treated with anti-fouling paint, wash the surface and remove the paint by wet-grinding. Collect any grinding dust to protect the environment.

Consult your local dealer for information on the correct cleaning agents for the boat.

14.2.1.1 Fiberglass surfaces

- Wax protects the boat's fiberglass surfaces and makes it easier to keep clean. Clean your boat thoroughly after the boating season and apply wax to the fiberglass surfaces before the start of the next boating season.
- Before applying wax, wash the fiberglass surfaces using a pressure washer, brush or sponge. Use mildly abrasive polishing agents to remove chafing and embedded dirt. Use cleaning agents containing oxalic acid or phosphoric acid to remove the stains around the waterline.
- Remove any fuel splashes immediately from the boat's surfaces.

© 2026 Inha Works

14.2.1.2 Aluminium surfaces

- For aluminium parts, use only cleaning agents that are specifically meant for aluminium surfaces. Do not use alcohol-based agents, solvent-based agents or cleaning agents that contain acids.
- Wash painted aluminium surfaces using the same cleaning agents that are suitable for aluminium in general.
- Remove chafe, oxidation, and stubborn stains from non-surface treated aluminium surfaces mechanically using fine-grade abrasive polish. Protect the aluminium surfaces after abrasive polishing using waxing products or protective oil.
- Protect aluminium surfaces above the waterline using a thin layer of protective oil for aluminium or similar multipurpose oil. Spray the oil onto the surface of the boat and wipe with a dry cloth.
- Wax the surfaces after polishing as wax protects the clean surface from getting dirty again and maintains the shine longer. Do not use abrasive polishing or wax products on anodized aluminium surfaces, such as fittings and railings. Waxing also protects painted and shiny metal surfaces.
- The removal of oxidation marks from aluminium surfaces is not necessary since oxide protects the metal naturally.
- Before winter storage, spray a generous layer of protective oil onto the aluminium surfaces, but do not wipe it off. Instead, leave the oil on the surface and wipe it clean only in the spring. This will also remove any dirt and dust that has accumulated during winter storage.
- Do not use abrasive polishing or wax products on anodized aluminium surfaces, such as fittings and railings.

14.2.1.3 Stainless steel surfaces

- Clean and wax the boat's stainless steel parts, such as rails, handles and bollards at least twice every season to keep them shiny. Also clean the edges of the mounting flanges of the rails as any dirt that remains under the edge of the flange will begin to look like rust.
- Carry out these maintenance measures also before putting the boat into winter storage.

14.2.1.4 Plastic surfaces

- Do not apply solvent-based cleaning agents to the consoles and other plastic components.
- Use only non-abrasive mild detergents.

14.2.1.5 Windshield

The boat’s windshield is made of tempered glass. Clean it with ordinary glass cleaners.

- Avoid circular motions when wiping the windshield dry after cleaning. This can create smudges which become visible in sunlight and impede visibility.
- Wipe off any streaks with dry newspaper or cotton cloth using first horizontal, then vertical motions.

© 2026 Inha Works

14.2.2 Marine upholstery

Follow these instructions in order to best care for and preserve the boat's upholstery.

Sunlight

The materials are designed for marine use and the surface is UV-protected, but long-term exposure to UV-radiation will fade the colours and shorten the service life of the materials.

Avoid storing cushions in direct sunlight for extended periods of time.

Humidity

Although the open cell plastic foam inside the cushions is protected with plastic, fungal growth may form on the inner surface of plastic foam and artificial leather.

- Do not store the cushions so that they are exposed to constant humidity.
- Do not let the cushions become waterlogged.

Frost

Avoid transporting, storage or use in temperatures under -20°C, as the surface of the material may rip.

Care and protection

To clean the upholstery:

- Wipe the upholstery with a damp cloth moistened with a neutral washing liquid; for example, dishwashing liquids or window-cleaning products diluted with water.
- It is a good idea to dry the cushions after washing.
- Remove more persistent dirt and stains by dissolving them with undiluted neutral washing detergent. Rinse and dry them afterwards.

Avoid the following:

- Solvents and petrol.
- Grease and motor oil.
- Abrasive cleaning equipment and scouring agents.
- Strong alkaline and acid cleaning products.
- Sharp and hot objects.
- Colouring liquids.
- Protective or conserving agents not intended for artificial leather.

14.2.3 Adjustable seats

If your boat is equipped with adjustable seats, periodically inspect them to identify potential wear or damage.

- Ensure that any sliding mechanisms are clear of debris to maintain smooth operation.
- If you detect issues, consult the seat manufacturer’s manual and have the seats inspected by a professional.

© 2026 Inha Works

14.2.4 Electronic remote control device

If there is a problem in the functioning of the electronic remote control device, it must be serviced at an authorised Yamaha workshop.

14.2.5 Steering system

Depending on the model and selected accessories, the boat can be equipped with either hydraulic, electrical, or mechanical steering.



If you replace any component in the steering system, note that all components must conform to the ISO 10592 standard and carry the CE mark.

Hydraulic steering

The hydraulic steering wheel's position changes constantly, which is why the boat is equipped with a symmetrical steering wheel.

The hydraulic steering does not require maintenance under normal circumstances. However, if the steering starts to feel loose, there is a leak in the system.

⚠ WARNING A hydraulic steering system that has a leak or trapped air in the hoses is extremely dangerous.

Have leaks repaired immediately.

Electrical steering

Electrical steering is maintenance free in normal conditions, but like any steering system should be checked for correct functionality regularly.

Mechanical steering

Have the uncovered parts of the mechanical steering system cleaned and greased during maintenance.

If the mechanical steering starts to feel stuck, take the boat in for professional servicing.

14.2.6 Electrical components

Electrical components such as main switches, other switches and connections do not normally need to be serviced if the boat is stored in a dry and well-ventilated place for the winter.

If, however, you wish to protect electrical components against oxidation, spray them every now and then with a moisture-repellent antioxidant.

© 2026 Inha Works

14.3 Trailer transportation and lifting

It is not recommended to use a trailer for regular transportation of the boat. A suitable trailer with sufficient number of support guides to distribute the load evenly and reduce point loads can be used for storing the boat.

Lifting

⚠ WARNING Safety risk.

Serious injury or death may occur if the boat falls when it is being lifted.

Never go under the boat when it is being lifted.

NOTICE Risk of material damage.

Pressure from the lifting straps can cause damage to the side boarding gate.

Always keep the side boarding gate open when lifting the boat.

When lifting the boat, consider the following:

- Only use a professional crane operator for lifting the boat.
- Make sure that the crane and lifting implements have sufficient lifting capacity.
- Do not use chains for lifting. Only use straps.
- Make sure the straps go under the keel when lifting. Never lift the boat using the mooring points.
- Make sure the crane's lifting frame is at least 3,36 m (11') wide.

© 2026 Inha Works

14.3.1 Placement of the lifting straps

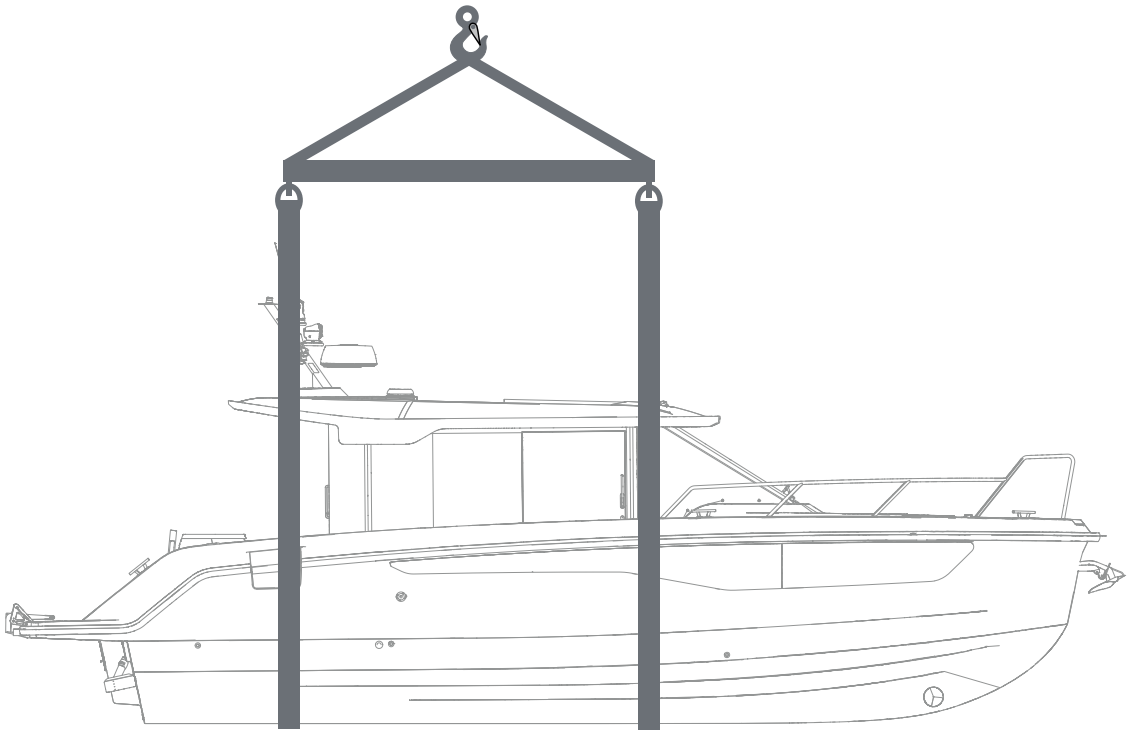

Figure 14.1 Placement of the lifting straps

© 2026 Inha Works

15 Related documents

The following documents are available as part of the owner's manual appendices.

- Declaration of conformity

  This document certifies that the boat meets all relevant standards and regulations. Ensure that the Declaration of Conformity form is filled in with the Watercraft Identification Number (WIN) of your boat, or that you obtain a separate form filled in by your dealer at the time of purchase.

- Wiring diagrams

  These diagrams provide detailed information on the boat's electrical system, which is essential for maintenance and troubleshooting.

© 2026 Inha Works